NOTES:
1. CONTROL PANEL, (OPTIONAL BATTERY CHARGER INSIDE).
2. 120V, 20A GFCI & 250V, 15A OUTLET (OPTIONAL).
3. CONNECTION POINTS FOR CONTROL WIRES PROVIDED IN THE LOW VOLTAGE CONNECTION BOX (USE LOW VOLTAGE STUB-UP AREA).
4. BATTERY (24 VOLT NEGATIVE GROUND SYSTEM).
5. MAIN LINE CIRCUIT BREAKER (MLCB), AC LOAD LEADS. (DIMENSIONS MAY VARY DUE TO UNIT CONFIGURATION)
6. CENTER OF GRAVITY AND WEIGHT MAY CHANGE DUE TO UNIT OPTIONS.
7. ENGINE SERVICE CONNECTIONS:
   - INLET NATURA GAS : N/A
   - INLET DIESEL : 1/2" NPT FEMALE COUPLING
   - RETURN DIESEL : 1/2" NPT FEMALE COUPLING
   - OIL DRAIN : 1/2" NPT FEMALE COUPLING
   - RADIATOR DRAIN : 1/2" NPT FEMALE COUPLING
   - FLEX PIPE OUTLET : 8" I.D. PIPE
   - EXHAUST OUTLET : 8" I.D. SAE FLANGE (TURBO CONNECTION)

..... SEE GENERATOR SIZING GUIDE FOR FUEL PIPE SIZING TO SUIT APPLICATION .....

8. AUXILARY AC CONNECTION FOR UNIT OPTIONS ARE LOCATED IN HIGH VOLTAGE CONNECTION BOX, UNLESS AN OPTIONAL LOAD CENTER IS INSTALLED.
9. EXHAUST PIPES MAY BE ROTATED TO ALLOW MUFFLER TO POINT OUT TO THE RIGHT OR LEFT SIDE OF GENERATOR. (MAY NOT APPLY TO ALL UNITS)
10. GENERATOR SET MUST BE INSTALLED SUCH THAT FRESH COOLING AIR IS AVAILABLE AND DISCHARGE AIR FROM THE RADIATOR IS NOT RECIRCULATED.
11. BOTTOM OF GENERATOR SET MUST BE ENCLOSED TO PREVENT PEST INTRUSION AND RECIRCULATION OF DISCHARGE AIR AND/OR IMPROPER COOLING AIR FLOW.
12. INSTALL EXHAUST BLANKETS ALONG THIS LINE
13. CONNECT THE OPEN SET EXHAUST PER NFPA 37
14. BOLTS OR STUDS USED TO MOUNT UNIT TO PAD, OR BASE TANK, SHALL BE 5/8"-11 GRADE 5. USE STANDARD SAE TORQUE SPECS. (FOR INSTALLATION OF FUEL TANK TO PAD REFER TO INSTALL DRAWING OF THE BASE TANK)

ADDITIONAL NOTES:
FOR WEIGHT AND CENTER OF GRAVITY DATA SEE NOTE 6, AND SHEET 3.

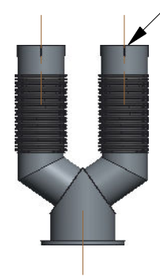

OPTIONAL EXHAUST CONFIGURATION

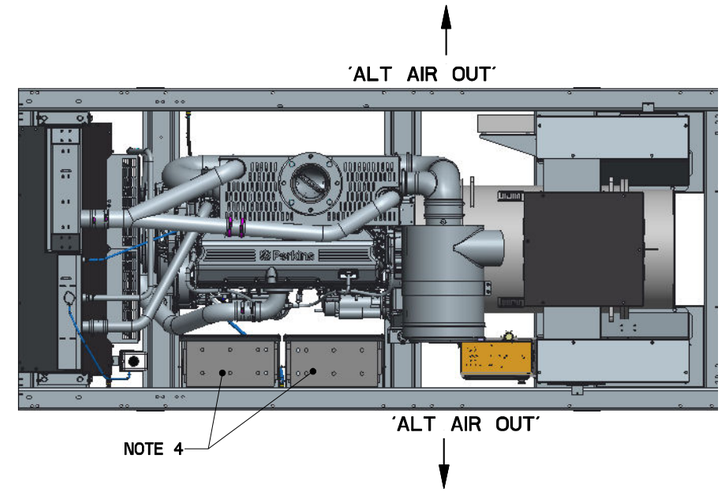

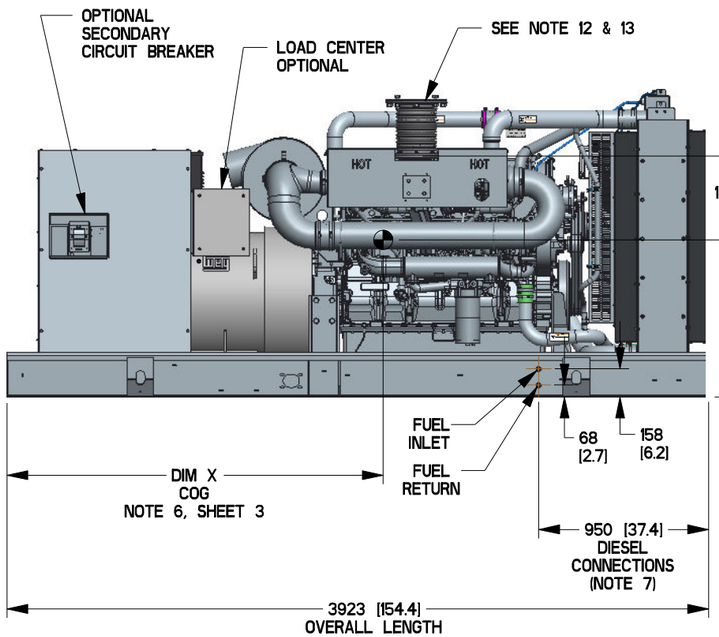

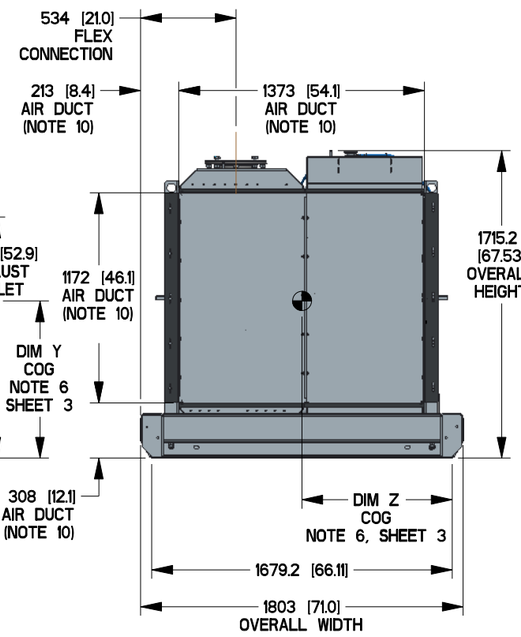

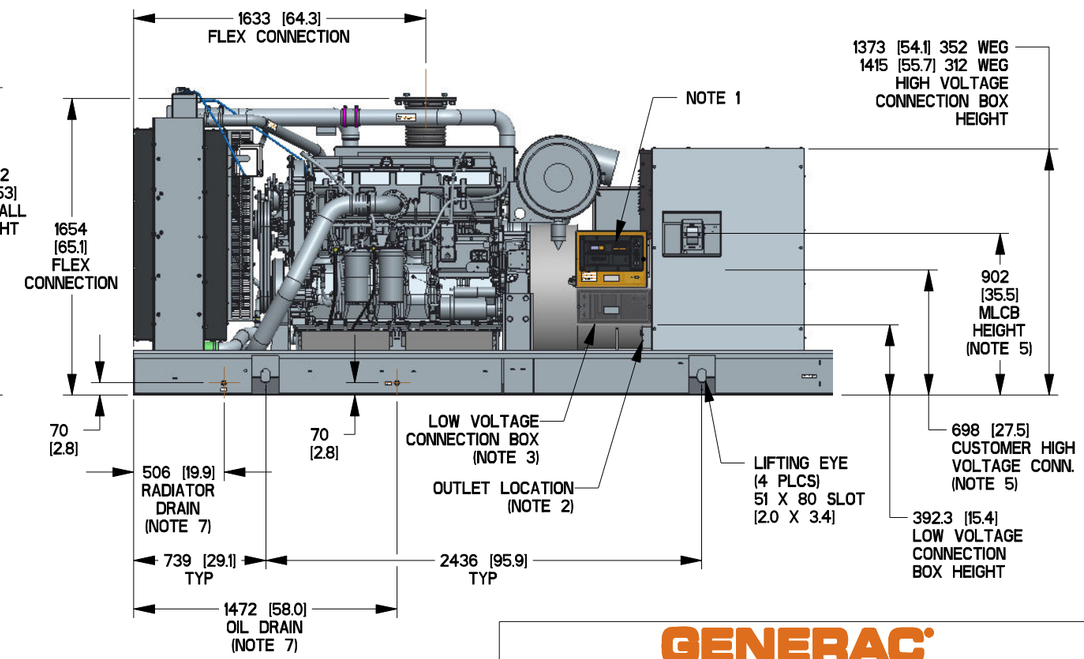

DIMENSIONS ARE IN MILLIMETERS [INCHES]

DRAWING CREATED FROM PRO/ENGINEER 3D FILE. ECO MODIFICATION TO BE APPLIED TO SOLID MODEL ONLY.

INSTALLATION DRAWING

GENERAC POWER SYSTEMS OWNS THE COPYRIGHT OF THIS DRAWING WHICH IS SUPPLIED IN CONFIDENCE AND MUST NOT BE USED FOR ANY PURPOSE OTHER THAN FOR WHICH IT IS SUPPLIED WITHOUT THE EXPRESS WRITTEN CONSENT OF GENERAC POWER SYSTEMS.
© GENERAC POWER SYSTEMS 2013

ELECTRONICALLY APPROVED
INSIDE WINDCHILL

GENERAC

TITLE
OPEN SET
D18.1L SD600, PD540

ISSUE DATE: 03/14/14

SIZE	CAGE NO	DWG NO		REV
B	N/A		0K1501	H
SCALE 0.030	WT-KG		SHEET 1 of 3	

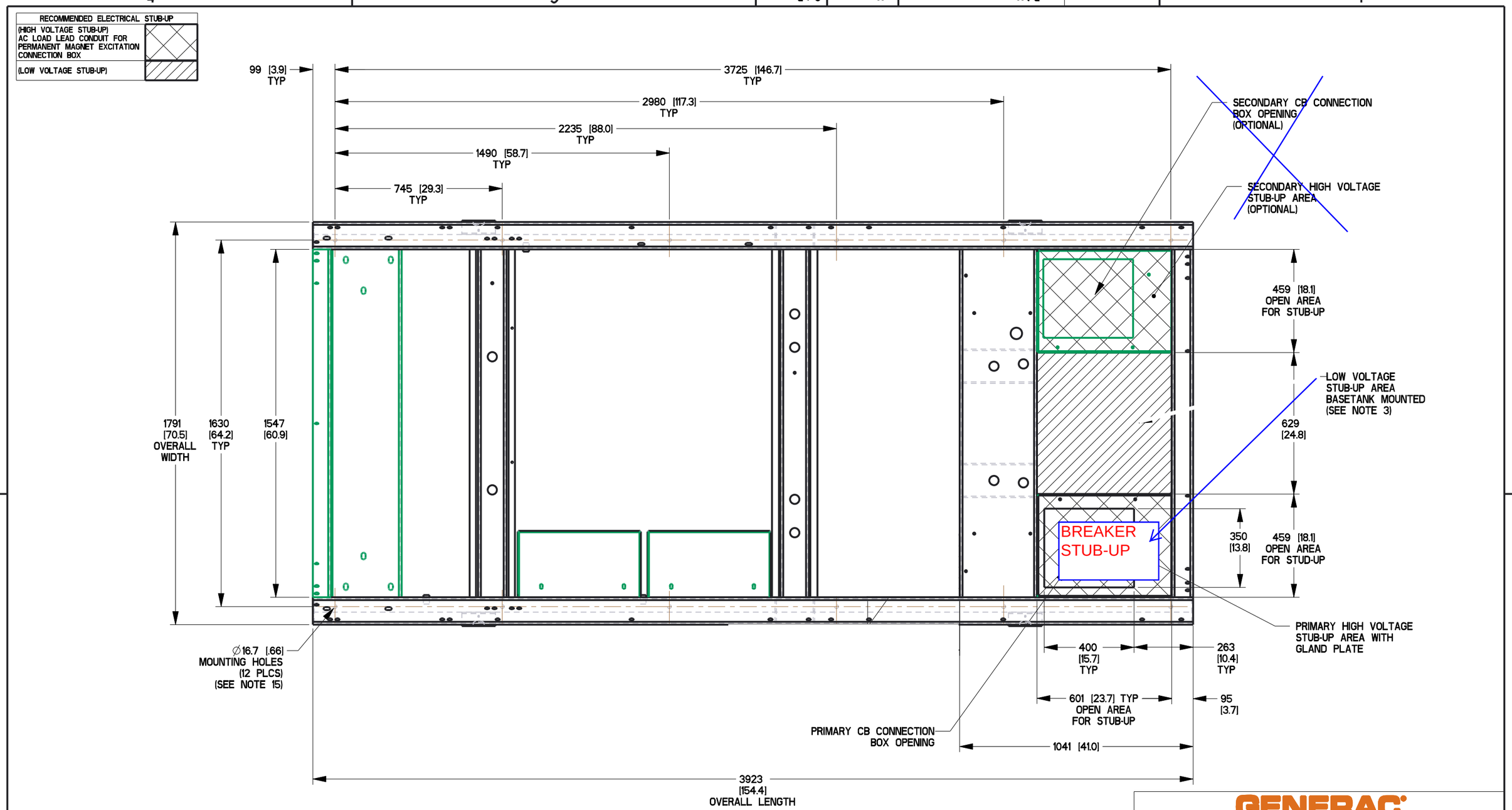

DRAWING CREATED FROM PRO/ENGINEER 3D FILE. ECO MODIFICATION TO BE APPLIED TO SOLID MODEL ONLY.

DIMENSIONS ARE IN MILLIMETERS [INCHES]

INSTALLATION DRAWING

GENERAC POWER SYSTEMS OWNS THE COPYRIGHT OF THIS DRAWING WHICH IS SUPPLIED IN CONFIDENCE AND MUST NOT BE USED FOR ANY PURPOSE OTHER THAN FOR WHICH IT IS SUPPLIED WITHOUT THE EXPRESS WRITTEN CONSENT OF GENERAC POWER SYSTEMS.
© GENERAC POWER SYSTEMS 2013

ELECTRONICALLY APPROVED INSIDE WINDCHILL

GENERAC

TITLE
STUB-UP VIEW
D18.1L SD600, PD540

ISSUE DATE: 03/14/14			
SIZE B	CAGE NO N/A	DWG NO 0K1501	REV H
SCALE 0.060	WT-KG		SHEET 2 of 3

OPEN SET

MODEL	VOLTAGE	WEIGHT	CENTER OF GRAVITY DIM X	CENTER OF GRAVITY DIM Y	CENTER OF GRAVITY DIM Z
SD/MD 600, PD/WD 540	480V	4,706 kg [10,375 lbs]	1734 [68.3]	631 [24.8]	837 [33.0]
SD600, PD540	208V & 240V				
SD/MD 600, PD/WD 540	600V	3,864 kg [8,520 lbs]	1937 [76.3]	650 [25.6]	837 [33.0]
SD600, PD540	208V, 240V UPSIZED ALT (723kw)	4,889 kg [10,778 lbs]	1705 [67.2]	628 [24.7]	838 [33.0]
SD/MD 600, PD/WD 540	480V UPSIZED ALT. (832kw)				
SD/MD 600, PD/WD 540	600V UPSIZED ALT. (730kw)	4,794 kg [10,569 lbs]	1720 [67.7]	630 [24.8]	837 [33.0]
SD/MD 600, PD/WD 540	600V UPSIZED ALT. (840kw)	4,627 kg [10,201 lbs]	1747 [68.8]	633 [24.9]	837 [33.0]

NOTE:
CENTER OF GRAVITY AND WEIGHT MAY CHANGE DUE TO UNIT OPTIONS.

STD ENCLOSURE, STEEL

MODEL	VOLTAGE	WEIGHT	CENTER OF GRAVITY DIM X	CENTER OF GRAVITY DIM Y	CENTER OF GRAVITY DIM Z
SD/MD 600, PD/WD 540	480V	5,735 kg [12,643 lbs]	1988 [78.3]	746 [29.4]	795 [31.3]
SD600, PD540	208V & 240V				
SD/MD 600, PD/WD 540	600V	4,893 kg [10,787 lbs]	2193 [86.4]	782 [30.8]	797 [31.4]
SD600, PD540	208V, 240V UPSIZED ALT (723kw)	5,918 kg [13,047 lbs]	1956 [77.0]	739 [29.1]	795 [31.3]
SD/MD 600, PD/WD 540	480V UPSIZED ALT. (832kw)				
SD/MD 600, PD/WD 540	600V UPSIZED ALT. (730kw)	5,823 kg [12,838 lbs]	1973 [77.7]	743 [29.3]	795 [31.3]
SD/MD 600, PD/WD 540	600V UPSIZED ALT. (840kw)	5,656 kg [12,470 lbs]	2003 [78.9]	749 [29.5]	795 [31.3]

STD ENCLOSURE, ALUMINUM

WEIGHT	CENTER OF GRAVITY DIM "X"	CENTER OF GRAVITY DIM "Y"	CENTER OF GRAVITY DIM "Z"
5,241 kg [11,555 lbs]	1903 [74.9]	700 [27.6]	790 [31.1]
4,400 kg [9,700 lbs]	2115 [83.3]	731 [28.8]	792 [31.2]
5,425 kg [11,960 lbs]	1871 [73.7]	695 [27.4]	790 [31.1]
5,330 kg [11,751 lbs]	1887 [74.3]	697 [27.5]	790 [31.1]
5,163 kg [11,383 lbs]	1917 [75.5]	702 [27.6]	791 [31.2]

L1A ENCLOSURE, STEEL

MODEL	VOLTAGE	WEIGHT	CENTER OF GRAVITY DIM X	CENTER OF GRAVITY DIM Y	CENTER OF GRAVITY DIM Z
SD/MD 600, PD/WD 540	480V	6,191 kg [13,649 lbs]	1867 [73.5]	774 [30.5]	802 [31.6]
SD600, PD540	208V & 240V				
SD/MD 600, PD/WD 540	600V	5,349 kg [11,793 lbs]	2031 [80.0]	812 [32.0]	851 [33.5]
SD600, PD540	208V, 240V UPSIZED ALT (723kw)	6,374 kg [14,052 lbs]	1841 [72.5]	767 [30.2]	801 [31.5]
SD/MD 600, PD/WD 540	480V UPSIZED ALT. (832kw)				
SD/MD 600, PD/WD 540	600V UPSIZED ALT. (730kw)	6,279 kg [13,843 lbs]	1854 [73.0]	771 [30.4]	801 [31.5]
SD/MD 600, PD/WD 540	600V UPSIZED ALT. (840kw)	6,112 kg [13,475 lbs]	1878 [73.9]	777 [30.6]	802 [31.6]

L1A ENCLOSURE, ALUMINUM

WEIGHT	CENTER OF GRAVITY DIM "X"	CENTER OF GRAVITY DIM "Y"	CENTER OF GRAVITY DIM "Z"
5,438 kg [11,989 lbs]	1846 [72.7]	716 [28.2]	794 [31.3]
4,596 kg [10,133 lbs]	2036 [80.2]	748 [29.5]	796 [31.3]
5,621 kg [12,392 lbs]	1817 [71.5]	710 [28.0]	793 [31.2]
5,526 kg [12,183 lbs]	1832 [72.1]	713 [28.1]	794 [31.3]
5,359 kg [11,815 lbs]	1859 [73.2]	718 [28.3]	794 [31.3]

L2A ENCLOSURE, STEEL

MODEL	VOLTAGE	WEIGHT	CENTER OF GRAVITY DIM X	CENTER OF GRAVITY DIM Y	CENTER OF GRAVITY DIM Z
SD/MD 600, PD/WD 540	480V	6,344 kg [13.986 lbs]	2036 [80.2]	913 [36.0]	798 [31.4]
SD600, PD540	208V & 240V				
SD/MD 600, PD/WD 540	600V	5,502 kg [12,130 lbs]	2224 [87.6]	973 [38.3]	805 [31.7]
SD600, PD540	208V, 240V UPSIZED ALT (723kw)	6,527 kg [14.390 lbs]	2006 [79.0]	902 [35.5]	798 [31.4]
SD/MD 600, PD/WD 540	480V UPSIZED ALT. (832kw)				
SD/MD 600, PD/WD 540	600V UPSIZED ALT. (730kw)	6,432 kg [14,180 lbs]	2022 [79.6]	907 [35.7]	798 [31.4]
SD/MD 600, PD/WD 540	600V UPSIZED ALT. (840kw)	6,265 kg [13,812 lbs]	2050 [80.7]	917 [36.1]	798 [31.4]

L2A ENCLOSURE, ALUMINUM

WEIGHT	CENTER OF GRAVITY DIM "X"	CENTER OF GRAVITY DIM "Y"	CENTER OF GRAVITY DIM "Z"
5,503 kg [12,132 lbs]	1932 [76.1]	786 [31.0]	792 [31.2]
4,662 kg [10,278 lbs]	2136 [84.1]	833 [32.8]	794 [31.3]
5,687 kg [12,538 lbs]	1900 [74.8]	778 [30.6]	792 [31.2]
5,592 kg [12,328 lbs]	1916 [75.4]	782 [30.8]	792 [31.2]
5,425 kg [11,960 lbs]	1946 [76.6]	790 [31.1]	792 [31.2]

DRAWING CREATED FROM PRO/ENGINEER 3D FILE. ECO MODIFICATION TO BE APPLIED TO SOLID MODEL ONLY.

INSTALLATION DRAWING

GENERAC POWER SYSTEMS OWNS THE COPYRIGHT OF THIS DRAWING WHICH IS SUPPLIED IN CONFIDENCE AND MUST NOT BE USED FOR ANY PURPOSE OTHER THAN FOR WHICH IT IS SUPPLIED WITHOUT THE EXPRESS WRITTEN CONSENT OF GENERAC POWER SYSTEMS.
© GENERAC POWER SYSTEMS 2013

ELECTRONICALLY APPROVED
INSIDE WINDCHILL

GENERAC

TITLE
WEIGHT & CENTER OF GRAVITY
D18.1L SD600, PD540

ISSUE DATE: 03/14/14

SIZE	CAGE NO	DWG NO	REV
B	N/A	0K1501	H

SCALE 0.030 | WT-KG | SHEET 3 of 3