PLAN SYMBOLS

- LUMINAIRE TYPE DESIGNATION (A)
- CIRCUIT NUMBER (3)
- SWITCH REFERENCE (a)
- 1x4 FLUORESCENT TROFFER, SURFACE MTD
- 2x4 FLUORESCENT TROFFER, SURFACE MTD
- 2x2 FLUORESCENT TROFFER, SURFACE MTD
- 1x4 FLUORESCENT TROFFER, RECESSED
- 2x4 FLUORESCENT TROFFER, RECESSED
- 2x2 FLUORESCENT TROFFER, RECESSED
- GENERAL PURPOSE INDUSTRIAL FLUORESCENT, SIZE PER PLANS
- LUMINAIRE w/ EMERGENCY BATTERY PACK
- UNSWITCHED LUMINAIRE
- HID, POLE MTD w/ SINGLE SQUARE HEAD
- HID, POLE MTD w/ DOUBLE SQUARE HEAD
- HID, POLE MTD w/ SINGLE ROUND HEAD
- HID, POLE MTD w/ DOUBLE ROUND HEAD
- SURFACE MTD
- RECESSED
- WALL MTD
- EXIT, SURFACE MTD
- EXIT, WALL MTD
- EMERGENCY, WALL MTD
- EMERGENCY w/ EXIT AND EMERGENCY BATTERY PACK, WALL MTD
- SINGLE POLE, MTD 48" AFF UNO
- 2-GANG, MTD 48" AFF UNO
- 3-GANG, MTD 48" AFF UNO
- 4-GANG, MTD 48" AFF UNO
- 2P — TWO POLE, MTD 48" AFF UNO
- 3(b) — THREE WAY, MTD 48" AFF UNO, (LOWER CASE LETTER INDICATES SWITCH CONTROL LEG)
- K — KEY OPERATED, MTD 48" AFF UNO
- P — PILOT LIGHT, MTD 48" AFF UNO
- RECEPTACLE 20A SINGLE, MTD 18" AFF UNO
- RECEPTACLE 20A DUPLEX, MTD 18" AFF UNO
- RECEPTACLE 20A SPLIT FEED, MTD 18" AFF UNO
- RECEPTACLE 20A FOURPLEX, MTD 18" AFF UNO
- RECEPTACLE 20A DUPLEX, CLG MTD
- RECEPTACLE 20A FOURPLEX, CLG MTD
- RECEPTACLE 20A DUPLEX, FLR MTD
- RECEPTACLE 20A FOURPLEX, FLR MTD
- ?? — RECEPTACLE 20A DUPLEX, MTD 18" AFF UNO
  - GFCI: GROUND FAULT CIRCUIT INTERRUPTER
  - IG: ISOLATED GROUND
  - SH: SHUTTER SAFETY
  - SP: SURGE PROTECTION
  - WP: WEATHERPROOF
- RECEPTACLE DECONTACTOR, MTD 18" AFF UNO
- RECEPTACLE 208V, MTD 18" AFF UNO
- RECEPTACLE REEL CORD
- JUNCTION BOX, SURFACE MTD
- JUNCTION BOX, WALL MTD
- JUNCTION BOX, FLR MTD
- PANELBOARD, NORMAL POWER
- PANELBOARD, EMERGENCY POWER
- 5HP — MOTOR, HORSEPOWER NOTED
- DAMPER MOTOR
- 30A — DISCONNECT SWITCH NON-FUSED, BUSS RATING NOTED
- 30AT 30AF — DISCONNECT SWITCH FUSED, BUSS (AF) AND FUSE (AT) RATING NOTED
- 1 — CONTACTOR, NEMA SIZE NOTED
- 1 — STARTER, NEMA SIZE NOTED
- 1 — COMBINATION MOTOR STARTER, NEMA SIZE NOTED
- T — TRANSFORMER
- PUSHBUTTON
- HH — HAND HOLE
  - AHH: ANALOG HAND HOLE 4-20mA SIGNAL, ETHERNET FIBER/UPT, TEL
  - CHH: CONTROL HAND HOLE 120/DIGITAL/DISCRETE SIGNAL, 120V POWER
  - PHH: POWER HAND HOLE 480V/277V/208V
- CONDUIT UP
- CONDUIT DOWN
- CONDUIT STUB
- CONDUIT HOMERUN, EXPOSED
- CONDUIT HOMERUN, UNDERGROUND OR CONCEALED
- OE — OVERHEAD ELECTRIC
- GROUND ROD
- GROUND ROD IN TEST WELL
- LIGHTING PROTECTION AIR TERMINAL
- SC CONNECTORS, 19" RACK MTD
- CAT6 PATCH PANEL, 110 PUNCH BLOCKS, 19" RACK MTD
- FAA — FIRE ALARM ANNUNCIATOR
- FACP — FIRE ALARM CONTROL PANEL
- FIRE ALARM EVACUATION COMBINATION AUDIBLE AND VISIBLE APPLIANCE (HORN/STROBE), WALL MTD w/ LENS 80" MIN & 96" MAX AFF
- FIRE ALARM EVACUATION VISIBLE APPLIANCE (STROBE), CLG MTD
- FIRE ALARM EVACUATION VISIBLE APPLIANCE (STROBE), WALL MTD w/ LENS 80" MIN & 96" MAX AFF
- X — FIRE ALARM HEAT DETECTOR
- FIRE ALARM MANUAL PULL STATION, WALL MTD w/ OPERABLE PART 42" MIN & 48" MAX AFF
- FIRE ALARM SMOKE DETECTOR, DUCT MTD w/ SAMPLE TUBES
- S — FIRE ALARM SMOKE DETECTOR, CLG MTD
- FS — FIRE SPRINKLER RISER FLOW SWITCH, COORDINATE EXACT REQUIREMENTS PRIOR TO ROUGH-IN
- TS — FIRE SPRINKLER RISER VALVE TAMPER SWITCH, COORDINTE EXACT REQUIREMENTS PRIOR TO ROUGH-IN
- OCCUPANCY SENSOR, SURFACE MTD
- OCCUPANCY SENSOR, WALL MTD
- 125kHz RFID PROXIMITY READER
- DOOR CONTACT
- SECURITY KEYPAD
- EGRESS PIR FOR DOOR SHUNT
- 360° PIR/GLASS BREAK DETECTOR
- REQUEST TO EXIT PUSHBUTTON
- PANIC/DURESS PUSHBUTTON
- MA — INTRUSION ALARM CONTACT
- ES — ELECTRIC DOOR STRIKE
- EL — ELECTRIC LOCK w/ INTERNAL RELAY
- S — SPEAKER, CONE TYPE (PUBLIC ADDRESS)
- SPEAKER, HORN TYPE WATTAGE NOTED
- CCTV CAMERA, PTZ: PAN/TILT/ZOOM

DIAGRAM SYMBOLS

- MCB — MOLDED-CASE CIRCUIT BREAKER IN
- MCP — MOTOR CIRCUIT PROTECTOR IN
- MOTOR STARTER CONTACTOR
- VACUUM CONTACTOR
- OL — MOTOR STARTER OVERLOAD RELAY
  - OL = THERMAL
  - EOL= ELECTRONIC
- R — MOTOR PROTECTION RELAY
- SOLID STATE REDUCED VOLTAGE STARTER
- 10A — FUSE, RATING NOTED
- TRANSFORMER, DELTA/WYE
- GROUND
- AUTOMATIC TRANSFER SWITCH
- DISCONNECT SWITCH
- POTENTIAL TRANSFORMER
- 3 PHASE, 3 WIRE, DELTA
- 3 PHASE, 4 WIRE, WYE, GND
- 3 — 100/5 — CURRENT TRANSFORMER, RATIO AND NUMBER OF CT'S AS NOTED
- CURRENT TRANSFORMER, ZERO SEQUENCE TYPE
- BUSHING TYPE CURRENT TRANSFORMER
- ISOLATING FUSE SWITCH, HIGH VOLTAGE PRIMARY FUSE CUT OUT, DRY
- ISOLATING FUSE SWITCH FOR ON-LOAD SWITCHING
- LIGHTNING ARRESTER
- CAPACITOR
- DRAWOUT CIRCUIT BREAKER
- 52 — POWER CIRCUIT BREAKER, FIXED TYPE, LOW OR MEDIUM VOLTAGE
- 52 — POWER CIRCUIT BREAKER, DRAWOUT TYPE, LOW OR MEDIUM VOLTAGE
- LOADBREAK ELBOW
- DISCONNECT SWITCH, GROUP OPERATED
- DISCONNECT SWITCH, STICK OPERATED
- DISCONNECT SWITCH, SELECTOR OR DOUBLE THROW
- DISCONNECT SWITCH WITH ARCING HORNS, MANUALLY OPERATED
- POTHEAD
- CONNECTIONS
- SHIELDED CONDUCTOR
- SPH — SPACE HEATER
- METERING DEVICE
  - WHM: WATT HOUR METER
  - WM: WATT METER
  - AM: AMMETER
  - VM: VOLTMETER
  - PFM: POWER FACTOR METER
- f — RELAY
  - 24: VOLTS PER HERTZ
  - 25: SYNC-CHECK
  - 27: UNDER VOLTAGE
  - 32: REVERSE POWER
  - 46: REVERSE PHASE CURRENT
  - 47: PHASE SEQUENCE VOLTAGE
  - 50: INSTANTANEOUS OVER-CURRENT
  - 51: OVER-CURRENT
  - 59: OVER-VOLTAGE
  - 67: REVERSE-CURRENT
  - 810: OVER FREQUENCY
  - 81U: UNDER FREQUENCY
  - 86G: GENERATOR LOCK-OUT
  - 87: DIFFERENTIAL
  - BF: BREAKER FAILURE
- DC/AC INVERTER
- DC/DC CONVERTER
- GENERATOR
- M — METER UTILITY
- 2V CELL
- NETWORK SWITCH
- BB — OSP 66 BLOCKS
- SPD — SURGE PROTECTION DEVICE
- PANELBOARD WITH MAIN LUGS ONLY (MLO)
- PANELBOARD WITH MAIN CIRCUIT BREAKER (MCB)
- 3% VFD 3% — VARIABLE FREQUENCY DRIVE WITH RVSS AND BYPASS

ABBREVIATIONS

A	AMPERE	LP	LIGHTING PANEL
ABV	ABOVE	LTG	LIGHTING, LIGHT OR LIGHTS
AC	ALTERNATING CURRENT		
ADD	ADDENDUM	LTFC	LIQUIDTIGHT FLEXIBLE CONDUIT
AF	AMPERE FRAME		
AFF	ABOVE FINISHED FLOOR	MAX	MAXIMUM
AFG	ABOVE FINISHED GRADE	MCB	MOLDED CASE BREAKER
AIC	ASYMMETRICAL INTERRUPTING CAPACITY	MCC	MOTOR CONTROL CENTER
		MCP	MOTOR CIRCUIT PROTECTION
ARCH	ARCHITECT/ ARCHITECTURAL	MECH	MECHANICAL
AT	AMPERE TRIP	MIN	MINIMUM
ATS	AUTOMATIC TRANSFER SWITCH	MFGR	MANUFACTURER
		MTR	MOTOR
AUTO	AUTOMATIC	MSS	MOTOR STARTER SWITCH
AV	AUDIO/VISUAL	MTD	MOUNTED
BCS	BACKUP CONTROL SYSTEM	MTS	MANUAL TRANSFER SWITCH
CHG	BATTERY CHARGER	N.C.	NORMALLY CLOSED
C	CONDUIT	NF	NON FUSED
CAB	CABINET	NO	NORMALLY OPEN
CAT6	CATEGORY 6	ø	PHASE
CB	CIRCUIT BREAKER, COMBINER BOX	PB	PUSH BUTTON
		PNL	PANEL
CC	CHARGE CONTROLLER	PR	PAIR
CCTV	CLOSED CIRCUIT TELEVISION	PT	POTENTIAL TRANSFORMER
		PVC	POLYVINYL CHLORIDE
CKT	CIRCUIT	PWR	POWER
CLG	CEILING	RECEPT	RECEPTACLE
COMB	COMBINATION	RM	ROOM
CONN	CONNECTION, OR CONNECT	RMC	RIGID METAL CONDUIT
		SA	SUB ARRAY
CONTR	CONTRACTOR	SHT	SHEET
COOD	COORDINATE	SPEC	SPECIFICATION
CPT	CONTROL POWER TRANSFORMER	SPD	SURGE PROTECTION DEVICE
CT	CURRENT TRANSFORMER	SPP	SUB PLANT PANEL
DC	DIRECT CURRENT, CONVERTER	SPR	SUB PLANT RACK
		STR	STARTER
DET	DETAIL	ST	SHUNT TRIP
DIST	DISTRIBUTION	STP	SHIELDED TWISTED PAIR
DIV	DIVISION	SW	SWITCH
DN	DOWN	SWBD	SWITCHBOARD
DS	DISCONNECT SWITCH	SWGR	SWITCHGEAR
DWG	DRAWING	TC	TIME CLOCK
EA	EACH	TDR	TIME DELAY RELAY
ELECT	ELECTRICAL	TEL	TELEPHONE
EMCS	ENERGY MANAGEMENT AND CONTROL SYSTEMS	TERM	TERMINAL
		UTP	UNSHIELDED TWISTED PAIR
EQUIP	EQUIPMENT	XFMR	TRANSFORMER
EXPL	EXPLOSION PROOF	TV	TELEVISION
EWC	ELECTRIC WATER COOLER	TYP	TYPICAL
F	FUSED	UNO	UNLESS NOTED OTHERWISE
FA	FIRE ALARM		
FD	FUSIBLE DISCONNECT	UG	UNDERGROUND
FIN	FINISHED FL FLOOR	V	VOLTS
FUT	FUTURE	VA	VOLT AMPERE
FIXT	FIXTURE LTG	VFD	VARIABLE FREQUENCY DRIVE
FVNR	FULL VOLTAGE NON-REVERSING		
		W	WATTS
G	GENERATOR	WP	WEATHERPROOF
GND	GROUND		
GFI	GROUND FAULT INTERRUPTER		
HH	HAND HOLE		
HOA	HAND – OFF – AUTO		
HP	HORSEPOWER		
HTG	HEATING		
HTR	HEATER		
Hz	HERTZ		
IC	INTERRUPTING CAPACITY		
I/C	INTERCOM		
INV	INVERTER		
JB	JUNCTION BOX		
kW	KILOWATTS		
kVA	KILOVOLT AMPERE		

GENERAL ELECTRICAL NOTES

1. THE ELECTRICAL CONTRACTOR SHALL BE RESPONSIBLE FOR COORDINATING ELECTRICAL INSTALLATIONS WITH ALL OTHER TRADES TO AVOID ANY CONFLICTS WITH PIPING, STRUCTURE, ETC.
2. ALL CONDUCTOR SIZES SPECIFIED FOR POWER CIRCUITS ARE BASED ON A SINGLE DEDICATED CIRCUIT PER CONDUIT WITH NO MORE THAN THREE CURRENT CARRYING CONDUCTORS IN THE CONDUIT. IF THE CONTRACTOR CONSOLIDATES TWO OR MORE CIRCUITS INTO A CONDUIT THEN THE CONTRACTOR SHALL INCREASE THE CONDUCTORS SIZES TO COMPENSATE FOR THE DE-RATING OF CONDUCTOR AMPACITY AS REQUIRED BY THE NEC WHEN THERE ARE MORE THAN THREE CURRENT CARRYING CONDUCTORS IN A CONDUIT. THE CONTACTOR SHALL ALSO INSURE THE CONDUIT IS NOT FILLED OVER 40% CAPACITY.
3. ALL NEW WIRING SHALL BE INSTALLED IN CONDUIT WITHOUT EXCEPTION. MINIMUM SIZE CONDUIT SHALL BE 3/4" RMC.
4. ALL NEW CONDUCTORS SHALL BE TYPE THHN/THWN-2 90ø COPPER FOR #10 AND SMALLER AND XHHW-2 FOR #8 AND LARGER.
5. THE USE OF NO. 14 AWG COPPER CONDUCTORS SHALL BE RESTRICTED TO CONTROL AND INSTRUMENT WIRING.
6. ALL ELECTRICAL EQUIPMENT SHALL BE GROUNDED IN ACCORDANCE WITH ARTICLE 250 OF THE N.E.C.
7. ALL CUTTING AND PATCHING REQUIRED FOR THE INSTALLATION OF NEW RACEWAYS OR EQUIPMENT SHALL BE PERFORMED BY A TRADESMAN EXPERIENCED IN THE WORK REQUIRED. ALL FINISHES SHALL MATCH EXISTING ADJACENT SURFACES.
8. THE ELECTRICAL CONTRACTOR SHALL BE RESPONSIBLE FOR ANY LOSS OR DAMAGE CAUSED BY HIM OR HIS WORKMAN TO THE FACILITY DURING THE COURSE OF CONSTRUCTION. THE ELECTRICAL CONTRACTOR SHALL BE RESPONSIBLE FOR REPAIRING OR REPLACING SUCH LOSS OR DAMAGE AT NO ADDITIONAL COST TO THE OWNER.
9. ALL ELECTRICAL EQUIPMENT INSTALLED ON THE ROOF OR OUTSIDE OF THE BUILDING SHALL BE NEMA 3R OR 4X RATED.
10. THE ELECTRICAL WORK SHALL COMPLY WITH ALL APPLICABLE CITY, COUNTY, STATE AND SERVING ELECTRICAL UTILITY CODES, ORDINANCES, RULES AND REGULATIONS. THE ENTIRE ELECTRICAL INSTALLATION SHALL COMPLY WITH OR SURPASS THE LATEST EDITION OF THE NATIONAL ELECTRICAL CODE.
11. THE ELECTRICAL CONTRACTOR SHALL FURNISH ALL MATERIALS, TOOLS, LABOR, PLAN CHECK FEES, ETC., FOR A COMPLETE ELECTRICAL INSTALLATION UNLESS OTHERWISE NOTED ON PLANS.
12. ALL MATERIALS FURNISHED BY THE ELECTRICAL CONTRACTOR SHALL BE NEW AND OF FIRST CLASS QUALITY, SHALL BE U.L. LISTED AND FREE OF ANY DEFECTS UNLESS OTHERWISE NOTED ON PLANS.
13. ALL EQUIPMENT SHALL BE RATED FOR USE INTENDED – VOLTAGE, H.P., ETC. ALL DISCONNECT SWITCHES FURNISHED SHALL BE LOAD BREAK RATED.
14. ALL NECESSARY PERMITS REQUIRED FOR ELECTRICAL INSTALLATIONS ARE THE RESPONSIBILITY OF THE ELECTRICAL CONTRACTOR AND SHALL BE CONSIDERED TO BE PART OF HIS CONTRACT FEE.
15. THE ELECTRICAL CONTRACTOR SHALL FULLY GUARANTEE HIS INSTALLATION FOR A PERIOD OF ONE YEAR FROM THE DATE OF FINAL ACCEPTANCE BY THE OWNER AGAINST IMPERFECT WORKMANSHIP AND MALFUNCTION OF EQUIPMENT. ANY WORK FOUND TO BE DEFECTIVE WITHIN THIS PERIOD SHALL BE REPAIRED OR REPLACED PROMPTLY AT NO ADDITIONAL COST TO THE OWNER.
16. DRAWINGS ARE DIAGRAMMATIC IN NATURE AND CANNOT SHOW EVERY CONNECTION, JUNCTION BOX, WIRE, CONDUIT, ETC. THE EXACT LOCATION AND ARRANGEMENT OF ALL PARTS SHALL BE DETERMINED AS THE WORK PROGRESSES. THE CONTRACTOR SHALL BE RESPONSIBLE FOR PROVIDING A COMPLETE AND FUNCTIONAL ELECTRICAL SYSTEM.

NOT ALL SYMBOLS AND ABBREVIATIONS ARE USED

Revision	By	Appd.	YY.MM.DD
1 CITY OF NAPLES COMMENTS	KME	APPROVED	18.07.12

Issued	By	Appd.	YY.MM.DD
ISSUED 75% DESIGN DRAWINGS TO CITY (PRELIM REVIEW)	SAH	RC	21.05.17
ISSUED FINAL DESIGN	SAH	RC	20.02.14
ISSUED 60% DESIGN DRAWINGS	KME	APPROVED	18.03.14

Consultants

Stantec
5801 Pelican Bay Boulevard, Suite 300
Naples, FL 34108
www.stantec.com

ECE Erickson Consulting Engineers
7201 Delainey Court
Sarasota, FL 32420
www.ericksonconsultingengineers.com

Copyright Reserved
The Contractor shall verify and be responsible for all dimensions. DO NOT scale the drawing - any errors or omissions shall be reported to Erickson Consulting Engineers (ECE) without delay.
The Copyrights to all designs and drawings are the property of ECE. Reproduction or use for any purpose other than that authorized by ECE is forbidden.

Client/Project
CITY OF NAPLES
735 8th St S
NAPLES, FL.
Naples Beach Restoration & Water Quality Improvement Project

File Name: 10606_E-001.dwg

DLS	JN	BCB	2022.04
Dwn.	Chkd.	Dsgn.	YYYY.MM

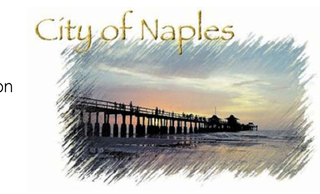

Title
GENERAL ELECTRICAL LEGEND AND NOTES

Project No. 177310606
Scale NO SCALE
Revision
Drawing No. E-001

\\uc0226.ecfad01\shared_projects\177310606\drawings\ce01-SouthSystem\active\electrical\sheet\10606_E001.dwg
2022/03/31 11:54 AM By: Keurney, Denise
ORIGINAL SHEET - ANSI D

MISCELLANEOUS SYMBOLS

- FLOW DIRECTION ARROWS
- VENT TO ATMOSPHERE
- SPEC1 | SPEC2 — SPEC CHANGE
- WALL
- GRADE
- FLOOR PENETRATION
- WATER LEVEL SYMBOL
- FIELD WELD SYMBOL
- A — ITEM TAG

PROCESS LINES

- PRIMARY PROCESS
- AUX. PROCESS
- FUTURE
- VENDOR PACKAGE BOUNDARY
- BOUNDARY MATCHLINE

EQUIPMENT ABBREVIATIONS

ABBREVIATION	DESCRIPTION
ACP	AREA CONTROL PANEL
COM	COMPRESSOR
CR	CRANE
LCP	LOCAL CONTROL PANEL
LP	LOW VOLTAGE PANELBOARD (120V OR LESS)
P	PUMP
SCR	SCREEN
TNK	TANK
VCP	VENDOR CONTROL PANEL

VALVE ABBREVIATIONS

ABBREVIATION	DISCRIPTION
AR	AIR RELEASE VALVE
ARV	AIR RELEASE/VACUUM VALVE
BAV	BALL VALVE
BCH	BALL CHECK VALVE
BUV	BUTTERFLY VALVE
CV	CHECK VALVE
()CV	CONTROL VALVE () – PRIMARY CONTROLLED VALVE MAY HAVE SEVERAL FUNCTIONS F – FLOWRATE L – LEVEL P – PRESSURE S – SURGE T – TEMPERATURE
GAV	GATE VALVE
GLV	GLOBE VALVE
KGV	KNIFE GATE VALVE
PV	PLUG VALVE
PRV	PRESSURE RELIEF VALVE

INSTRUMENT SYMBOLS

	CONTROL ROOM PANEL	FIELD MOUNTED	LOCAL PANEL
DISCRETE INSTRUMENTS	SD*		
SHARED DISPLAY SHARED CONTROL eg. DCS = DISTRIBUTED CONTROL SYSTEM			
COMPUTER FUNCTION eg. FLOW METER			
PROGRAMMABLE LOGIC CONTROL (PLC) (RTU)	XXX	XXX	XXX 3 1 4 5 2 6

* SUBSCRIPT ABBREVIATION SPECIFIES INSTRUMENT FUNCTION OR LOCATION.
eg. IP#1 (INSTRUMENT PANEL #1), SD (SHUTDOWN)

STATUS LIGHT
(SHOW COLOR INSIDE SYMBOL)

EQUIPMENT AND VALVE IDENTIFICATION

LINE LABEL
- COMMODITY CODE
- PIPE DIAMETER (IN INCHES)
- PIPE MATERIAL SPECIFICATION

XXX-###-XXX

VALVE LABEL
- VALVE TYPE
- ALPHA SUFFIX

XXX-###

CHANNEL LABEL
- COMMODITY CODE
- CHANNEL WIDTH
- CHANNEL

XXX-###-CHNL

LINE SOURCE OR DESTINATION TAG

XX-### (AAA / BBB)
- AAA — COMMODITY
- AAA — TO/FROM DWG
- AAA — SOURCE OR DESTINATION DWG NUMBER TO BE INSIDE ARROW
- BBB — SOURCE OR DESTINATION

EQUIPMENT TAG

XX-XXX
XXXXX
XXXXX
- EQUIPMENT IDENTIFIER
- EQUIPMENT OR LOOP NO.
- EQUIPMENT NAME

XX
XXX
XXXXX
XXXXX
- EQUIPMENT IDENTIFIER
- EQUIPMENT OR LOOP NO.
- EQUIPMENT NAME

INSTRUMENT LINE SYMBOLS

- ELECTRICAL SIGNAL
- PNEUMATIC SIGNAL
- CAPILLARY TUBING
- HYDRAULIC SIGNAL
- CONTROL SYSTEM DATA LINK DEVICENET OR ETHERNET AS NOTED
- DATA LINK OR SYSTEM BUS AND SOFT INTERAL LINK
- ELECTROMAGNETIC OR SONIC SIGNAL (GUIDED AND NON GUIDED)
- INTERLOCK

NOTES:
1. FINAL INTERCONNECTION IS SUBJECT TO PRE–PACKAGED PROCESS EQUIPMENT VENDOR. CONTRACTOR TO PROVIDE ALL POWER, CONTROLS AND SIGNALS REQUIRED TO MEET THE REQUIREMENTS.
2. PANEL MOUNTED EQUIPMENT SHOWN FOR FUTURE FIELD DEVICES SHALL BE PROVIDED.

FUNCTIONAL IDENTIFICATION CODE

	FIRST–LETTER		SUCCEEDING–LETTERS		
	MEASURED OR INITIATING VARIABLE	MODIFIER	READOUT OR PASSIVE FUNCTION	OUTPUT FUNCTION	MODIFIER
A	ANALYSIS		ALARM		
B	BURNER, COMBUSTION				
C	CONDUCTIVITY CLOSE			CONTROL	CLOSED
D	DENSITY	DIFFERENTIAL			DEVIATION
E	VOLTAGE		SENSOR (PRIMARY ELEMENT)		
F	FLOW	RATIO (FRACTION)			
G	GENERAL		GLASS, GAUGE		
H	HAND OPERATED		HORN		HIGH
I	CURRENT (ELECTRICAL)		INDICATE		
J	POWER	SCAN			
K	TIME, TIME SCHEDULE	TIME RATE OF CHANGE		CONTROL STATION	
L	LEVEL		LIGHT		LOW
M	MOTOR	MOMENTARY			MIDDLE, INTERMEDIATE
N	MOISTURE				
O			ORIFICE, RESTRICTION		OPEN
P	PRESSURE, VACUUM		POINT (TEST) CONNECTION		
Q	QUANTITY, STATE	INTEGRATE, TOTALIZE			
R	RADIATION		RECORD		RUN
S	SPEED, FREQUENCY	SAFETY		SWITCH	STOP
T	TEMPERATURE			TRANSMIT	
U	MULTIVARIABLE		MULTIFUNCTION	MULTIFUNCTION	MULTIFUNCTION
V	VIBRATION, MECHANICAL ANALYSIS			VALVE, DAMPER, LOUVER	
W	WEIGHT, FORCE		PROBE		
X	ON/OFF	X AXIS	UNCLASSIFIED	UNCLASSIFIED	UNCLASSIFIED
Y	EVENT STATE PRESENCE	Y AXIS		RELAY, COMPUTE, CONVERT	
Z	POSITION, DIMENSION	Z AXIS		DRIVER, ACTUATOR, UNCLASSIFIED FINAL CONTROL ELEMENT	

NOT ALL SYMBOLS AND ABBREVIATIONS ARE USED

INSTRUMENT SUBSCRIPT ABBREVIATIONS

ABBR.	DESCRIPTION	ABBR.	DESCRIPTION
ACK	ACKNOWLEDGE	I/P	CURRENT TO PNEUMATIC
ACP	AREA CONTROL PANEL	LCP	LOCAL CONTROL PANEL
A/S	AIR SUPPLY	LEL	LOWER EXPLOSIVE LIMIT
BRG	BEARING	LOR	LOCAL/OFF/REMOTE
CT	CURRENT TRANSFORMER	M/A	MANUAL/AUTO
CL2	CHLORINE	O2	OXYGEN
COMB	COMBUSTIBLE	OBD	OUTBOARD
DIFF	DIFFERENTIAL	O/C	OPEN/CLOSE
DISCH	DISCHARGE	O/L	OVERLOAD
DO	DISSOLVED OXYGEN	O/O	ON/OFF
D/P	DIFFERENTIAL PRESSURE	ORP	OXYGEN REDUCTION POTENTIAL
ESO	EMERGENCY SHUTDOWN	PAR	PROCESS ALARM RELAY
ETM	ELAPSED TIME METER	PLC	PROGRAMMABLE LOGIC CONTROL
FC	FAIL CLOSED	RESET	RESET
FO	FAIL OPEN	RIO	REMOTE INPUT/OUTPUT
H	HIGH	SO2	SULPHUR DIOXIDE
HH	HIGH HIGH	SP	SET POINT
HMI	HUMAN MACHINE INTERFACE	SW	SELECTOR SWITCH
HOA	HAND/OFF/AUTO	S/S	STOP/START
HORN	ANNUNCIATOR HORN	TURB	TURBIDITY
HOR	HAND/OFF/REMOTE	UPS	UNINTERRUPTABLE POWER SUPPLY
H2S	HYDROGEN SULPHIDE	VCP	VENDOR CONTROL PANEL
IBD	INBOARD	VIB	VIBRATION
I/I	CURRENT/CURRENT ISOLATION	WDG	WINDING

HAND SWITCH DESIGNATION

ABBR.	DESCRIPTION	ABBR.	DESCRIPTION
ES	EMERGENCY STOP	LOR	LOCAL–OFF–REMOTE
HOA	HAND–OFF–AUTO	LR	LOCAL–REMOTE
HOR	HAND–OFF–REMOTE	O/C	OPEN–CLOSE
J	JOG	O/O	ON–OFF

INSTRUMENT LOGIC AND SIGNAL TYPES

- I — SYSTEM LOGIC, OR INTERLOCK
- R — MANUAL RESET
- E — EMERGENCY SHUTDOWN LOGIC
- P — PURGE OR FLUSHING DEVICE
- C — CONTROL UNIT
- SS — SAMPLER
- FIELDBUS INTERFACE INCLUDED IN MCC PACKAGE
- INSTRUMENTS AND/OR CONTROLS INCLUDED IN EQUIPMENT PACKAGE
- DISCRETE INPUT
- DISCRETE OUTPUT
- ANALOG INPUT
- ANALOG OUTPUT
- PULSE INPUT
- PULSE OUTPUT
- SP — SPECIALTY ITEM FROM SPEC
- TP — TIE POINT
- VAB — VACUUM BREAKER

EQUIPMENT IDENTIFICATION TAG

XXX–MCC–001
- SEQUENTIAL LOOP IDENTIFIER UNIQUE NUMBER ASSIGNMENT BASED ON FUNCTION
- FUNCTIONAL IDENTIFICATION CODE
- PROCESS AREA NUMBER (AS REQUIRED)

TAG NUMBERS & INDENTIFICATION

XXX–FIT–001
- FUNCTIONAL IDENTIFICATION CODE (SEE TABLE ABOVE)
- INSTRUMENT SUBSCRIPT ABBREVIATIONS (SEE TABLE TO RIGHT)
- SEQUENTIAL LOOP IDENTIFIER UNIQUE NUMBER ASSIGNMENT
- PROCESS AREA NUMBER

xx FIT xx xxx

Revision	By	Appd.	YY.MM.DD
1 CITY OF NAPLES COMMENTS	KME	APPROVED	18.07.12

Issued	By	Appd.	YY.MM.DD
ISSUED 75% DESIGN DRAWINGS TO CITY (PRELIM REVIEW)	SAH	RC	21.05.17
ISSUED FINAL DESIGN	SAH	RC	20.02.14
ISSUED 60% DESIGN DRAWINGS	KME	APPROVED	18.03.14

Consultants

Stantec
5801 Pelican Bay Boulevard, Suite 300
Naples, FL 34108
www.stantec.com

ECE
Erickson Consulting Engineers
7201 Delainey Court
Sarasota, FL 32420
www.ericksonconsultingengineers.com

Copyright Reserved
The Contractor shall verify and be responsible for all dimensions. DO NOT scale the drawing - any errors or omissions shall be reported to Erickson Consulting Engineers (ECE) without delay.
The Copyrights to all designs and drawings are the property of ECE. Reproduction or use for any purpose other than that authorized by ECE is forbidden.

Client/Project
CITY OF NAPLES
735 8th St S
NAPLES, FL.
Naples Beach Restoration & Water Quality Improvement Project

File Name: 10606ei-001.dwg

DLS	JN	BCB	2022.04
Dwn.	Chkd.	Dsgn.	YYYY.MM

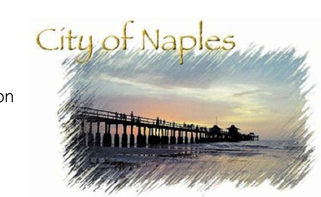

Title
GENERAL INSTRUMENTATION LEGENDS

Project No. 177310606
Scale NO SCALE
Revision
Drawing No. EI-001

\\ad005.ecfor01.shared.project\177310606\drawings\set01-SouthSystem\active\instrumentation\10606ei-001.dwg
2022/02/31 1:46 PM By: Kearney, Denise
ORIGINAL SHEET - ANSI D

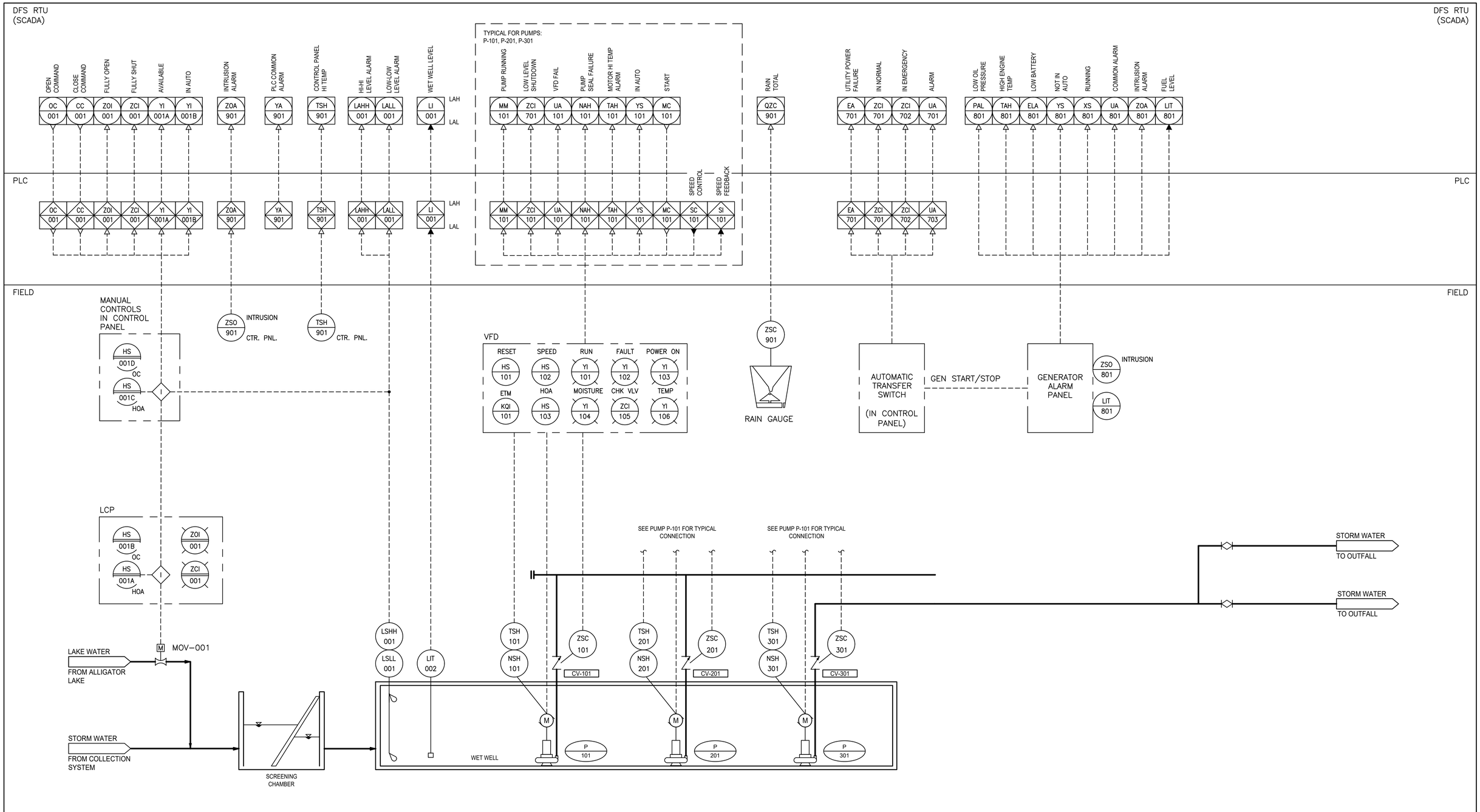

Revision	By	Appd.	YY.MM.DD
1 CITY OF NAPLES COMMENTS	KME	APPROVED	18.07.12

Issued	By	Appd.	YY.MM.DD
ISSUED 75% DESIGN DRAWINGS TO CITY (PRELIM REVIEW)	SAH	RC	21.05.17
ISSUED FINAL DESIGN	SAH	RC	20.02.14
ISSUED 60% DESIGN DRAWINGS	KME	APPROVED	18.03.14

Consultants

Stantec

5801 Pelican Bay Boulevard, Suite 300
Naples, FL 34108
www.stantec.com

ECE
Erickson Consulting Engineers

7201 Delainey Court
Sarasota, FL 32420
www.ericksonconsultingengineers.com

Copyright Reserved
The Contractor shall verify and be responsible for all dimensions. DO NOT scale the drawing - any errors or omissions shall be reported to Erickson Consulting Engineers (ECE) without delay.
The Copyrights to all designs and drawings are the property of ECE. Reproduction or use for any purpose other than that authorized by ECE is forbidden.

Client/Project

CITY OF NAPLES
735 8th St S
NAPLES, FL.

Naples Beach Restoration & Water Quality Improvement Project

File Name: 10606ei-601.dwg

DLS	JN	BCB	2022.04
Dwn.	Chkd.	Dsgn.	YYYY.MM

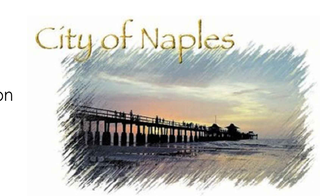

Title

GENERAL INSTRUMENTATION P&ID

Project No. 177310606

Scale NO SCALE

Revision

Drawing No. EI-601

\\usr02fs-cwfp01\shared_projects\177310606\drawings\wt01-SouthSystem\active\instrumentation\10606ei-601.dwg
2022/03/31 1:53 PM By: Kearney, Denise

ORIGINAL SHEET - ANSI D

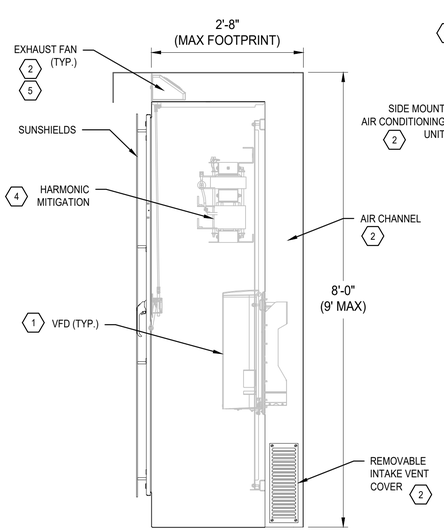

CONTROL PANEL ENCLOSURE DETAIL (SIDE)
N.T.S.

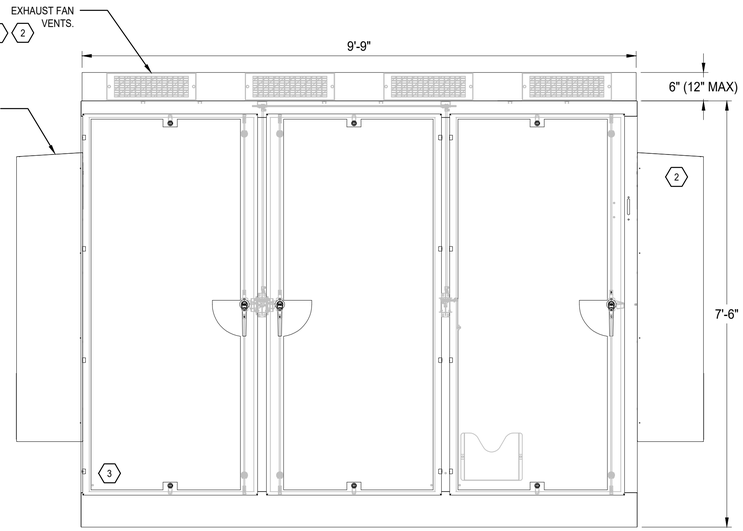

CONTROL PANEL ENCLOSURE DETAIL (FRONT)
N.T.S.

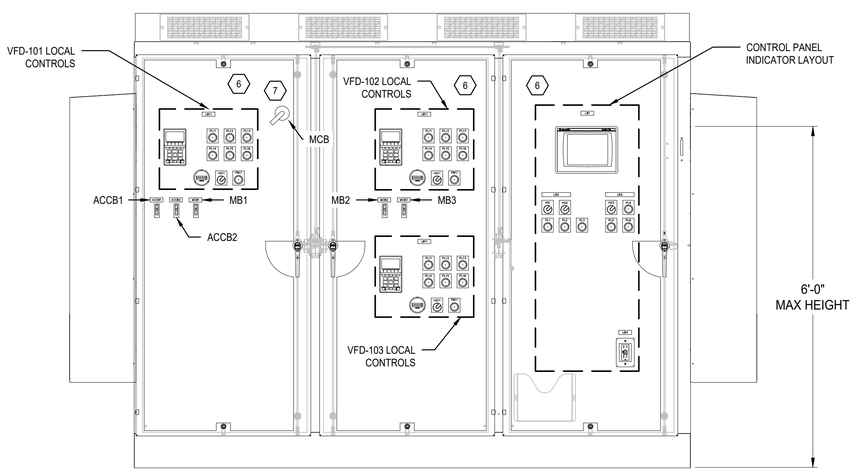

CONTROL PANEL INNER DOOR LAYOUT
N.T.S.

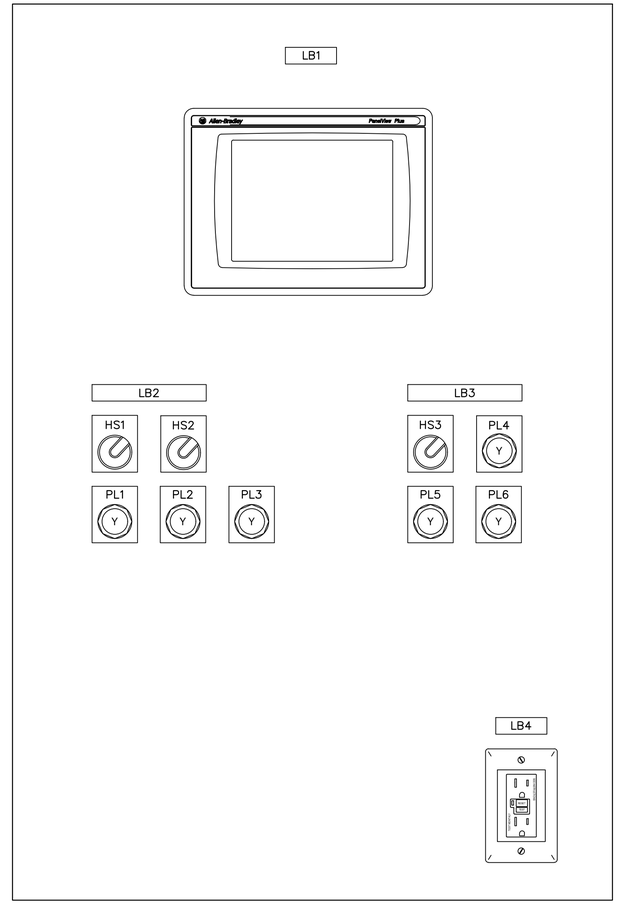

CONTROL PANEL GENERAL INDICATOR LAYOUT
N.T.S.

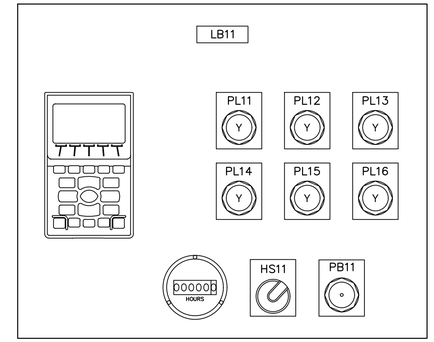

TYPICAL VFD INDICATOR LAYOUT
N.T.S.

PANEL LABEL LEGEND:

LB1	NAPLES BEACH OUTFALL PUMP CONTROL PANEL
LB2	ALLIGATOR LAKE PINCH VALVE MOV-101
LB3	FLOAT BACKUP CONTROL
LB4	LAPTOP ONLY
LB11	PUMP #1 VFD VFD-101
HS1	HAND, OFF, AUTO
HS2	OPEN, STOP, CLOSE
HS3	ENABLE, DISABLE
HS11	HAND, OFF AUTO
PB11	RESET
PL1	FULLY OPEN
PL2	FULLY SHUT
PL3	AVAILABLE
PL4	BACKUP ENGAGED
PL5	HIGH LEVEL FLOAT
PL6	LOW LEVEL FLOAT
PL11	POWER ON
PL12	RUNNING
PL13	FAULT
PL14	SEAL FAIL
PL15	HI TEMP
PL16	NO FLOW SHUTDOWN (CHECK VALVE CLOSED)
ACCB1	AIR CONDITIONER (LEFT)
ACCB2	AIR CONDITIONER (RIGHT)
MCB	MAIN CIRCUIT BREAKER
MB1	VFD-101
MB2	VFD-201
MB3	VFD-301

GENERAL NOTES:

A. THE CONTROL PANEL DETAILS HEREIN ARE DIAGRAMMATIC IN NATURE FOR THE PURPOSE OF ILLUSTRATING GENERAL REQUIREMENTS. THE CONTROL PANEL MANUFACTURER SHALL PROVIDE COMPLETE SHOP DRAWINGS AND IS RESPONSIBLE FOR A FULLY FUNCTIONAL CONTROL PANEL IN ACCORDANCE WITH THE REQUIREMENTS PROVIDED IN DESIGN DRAWINGS AND SPECIFICATIONS.

B. THE CONTROL PANEL SHALL BE ASSEMBLED BY A UL-508A PANEL SHOP AND SHALL BEAR THE UL LABEL.

C. THE CONTROL PANEL ENCLOSURE SHALL BE FACTORY PAINTED WHITE AND INCLUDE WHITE SUNSHIELDS. THE SUNSHIELDS SHALL BE AFFIXED TO THE PANEL DOORS, AND ALL FACES THAT RECEIVE DIRECT SUNLIGHT EXPOSURE.

KEYED NOTES:

1. THE VFDS SHALL BE FLANGE MOUNTED SUCH THAT THE HEATSYNC EXTENDS OUTSIDE THE BACK OF THE PANEL AND THE VFD SECTION OF THE PANEL RETAINS NEMA 4X RATING.
2. THE DESIGN BASIS COOLING SOLUTION INCLUDES FLANGE MOUNTED VFDS WITH DUCTED AIR, AND AIR CONDITIONING FOR INTERNAL COMPONENTS AS SHOWN. THE PANEL MANUFACTURER SHALL PERFORM CALCULATIONS TO ENSURE ADEQUATE AIRFLOW TO DISSIPATE HEAT. THE CALCULATIONS SHALL BE USED TO DETERMIINE SIZE AND QUANTITY OF FANS AND TO SIZE THE AIR CONDITIONING UNIT. THE FANS SHALL BE CONTROLLED BASED ON PUMP OPERATION AND WITH A USER ADJUSTABLE TEMPERATURE SWITCH. ALTERNATE FAN CONTROLS REQUIRE APPROVAL FROM THE ENGINEER.
3. THE PANEL MANUFACTURER SHALL ARRANGE INTERNAL COMPONENTS AS REQUIRED TO FIT ALL COMPONENTS AND MEET NEC CODE.
4. THE PANEL MANUFACTURER SHALL PROVIDE HARMONIC MITIGATION THAT MEETS THE REQUIREMENTS OF IEEE 519.
5. EXHAUST FANS SHALL BE REMOVABLE FOR SERVICING AND REPLACEMENT.
6. FURNISH AND INSTALL THE FOLLOWING ELECTRICAL WARNING LABELS ON EACH INNER DOOR PANEL:
   - 6.1. ARC FLASH HAZARD LABEL IN ACCORDANCE WITH PROJECT SPECIFICATIONS.
   - 6.2. OSHA DANGER SAFETY LABEL INDICATING "480 VOLTS".
   - 6.3. A LABEL INDICATING THE PANEL RECEIVES POWER FROM MULTIPLE SOURCES WITH THE 120V BREAKER IN PB-1 AND 480V BREAKER IN SWBD-1 LISTED.
   - 6.4. A LABEL INDICATING UPS VOLTAGE IS PRESENT WHEN POWER IS OFF.
7. PROVIDE A REMOTE MOUNT BREAKER OPERATOR HANDLE FOR THE MAIN BREAKER,. MOUNT HANDLE ON INNER DOOR. INCLUDE DEFEATABLE MECHANICAL INTERLOCK THAT PREVENTS OPENING THE INNER DOORS ON THE STARTER SIDE OF THE PANEL WHEN THE BREAKER IS IN THE ON POSITION.

Revision	By	Appd.	YY.MM.DD
1 CITY OF NAPLES COMMENTS	KME	APPROVED	18.07.12

Issued	By	Appd.	YY.MM.DD
ISSUED 75% DESIGN DRAWINGS TO CITY (PRELIM REVIEW)	SAH	RC	21.05.17
ISSUED FINAL DESIGN	SAH	RC	20.02.14
ISSUED 60% DESIGN DRAWINGS	KME	APPROVED	18.03.14

Consultants

Stantec

5801 Pelican Bay Boulevard, Suite 300
Naples, FL 34108
www.stantec.com

ECE
Erickson Consulting Engineers

7201 Delainey Court
Sarasota, FL 32420
www.ericksonconsultingengineers.com

Copyright Reserved
The Contractor shall verify and be responsible for all dimensions. DO NOT scale the drawing - any errors or omissions shall be reported to Erickson Consulting Engineers (ECE) without delay.
The Copyrights to all designs and drawings are the property of ECE. Reproduction or use for any purpose other than that authorized by ECE is forbidden.

Client/Project
CITY OF NAPLES
735 8th St S
NAPLES, FL.
Naples Beach Restoration & Water Quality Improvement Project

File Name: 10606ei-701.dwg

DLS	JN	BCB	2022.04
Dwn.	Chkd.	Dsgn.	YYYY.MM

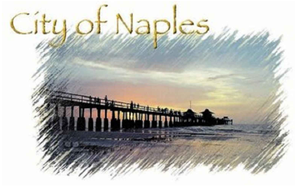

Title
CONTROL PANEL
GENERAL LAYOUT I OF II

Project No. 177310606
Scale NO SCALE
Revision
Drawing No. EI-701

\\us0224.ppd01\shared_projects\177310606\drawings\ei01-SouthSystem\active\instrumentation\10606ei-701.dwg
2022/03/31 1:58 PM By: kearney, Denise

ORIGINAL SHEET - ANSI D

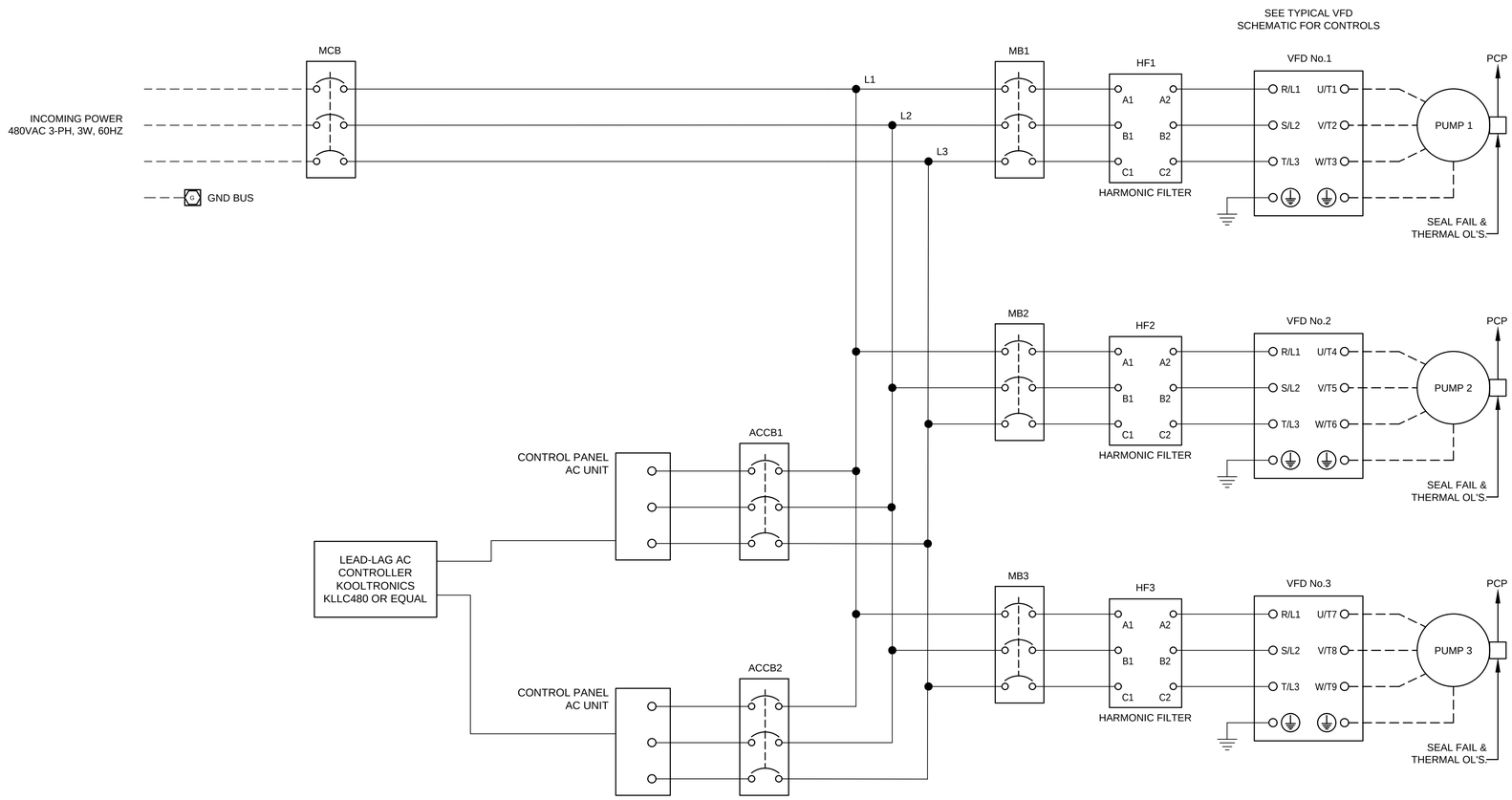

NOTES:

1. THE CONTROL PANEL SCHEMATICS HEREIN ARE DIAGRAMMATIC IN NATURE FOR THE PURPOSE OF ILLUSTRATING DESIGN INTENT. THE PANEL BUILDER SHALL COORDINATE REQUIREMENTS FOR POWER DISTRIBUTION WITH THE ONE-LINE DIAGRAM ON E-601. THE PANEL BUILDER SHALL INCLUDE ADDITIONAL CIRCUITS AS REQUIRED FOR MISCELLANEOUS PANEL LOADS.

2. THE CONTROL PANEL SUPPLIER SHALL PROVIDE COOLING FOR THE PANEL IN ACCORDANCE WITH PROJECT SPECIFICATIONS.

Revision	By	Appd.	YY.MM.DD

Issued	By	Appd.	YY.MM.DD
ISSUED 75% DESIGN DRAWINGS TO CITY (PRELIM REVIEW)	SAH	RC	21.05.17
ISSUED FINAL DESIGN	SAH	RC	20.02.14
ISSUED 60% DESIGN DRAWINGS	KME	APPROVED	18.03.14

Consultants

Stantec

5801 Pelican Bay Boulevard, Suite 300
Naples, FL 34108
www.stantec.com

ECE
Erickson Consulting Engineers

7201 Delainey Court
Sarasota, FL 32420
www.ericksonconsultingengineers.com

Copyright Reserved
The Contractor shall verify and be responsible for all dimensions.
DO NOT scale the drawing - any errors or omissions shall be reported to Erickson Consulting Engineers (ECE) without delay.
The Copyrights to all designs and drawings are the property of ECE.
Reproduction or use for any purpose other than that authorized by ECE is forbidden.

Client/Project

CITY OF NAPLES
735 8th St S
NAPLES, FL.

Naples Beach Restoration
& Water Quality
Improvement Project

File Name: 10606ei-703.dwg

DLS	JN	BCB	2022.04
Dwn.	Chkd.	Dsgn.	YYYY.MM

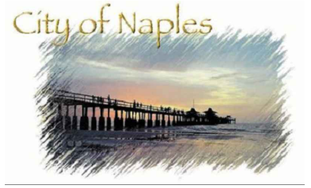

Title

CONTROL PANEL
ELEMENTARY SCHEMATIC 1

Project No. 177310606

Scale NO SCALE

Revision

Drawing No. EI-703

\\ca0226-ceph01\shared_projects\177310606\drawings\ei\01-South System\active\instrumentation\10606ei-703.dwg
2022/03/31 2:02 PM By: Kearney, Denise

ORIGINAL SHEET - ANSI D

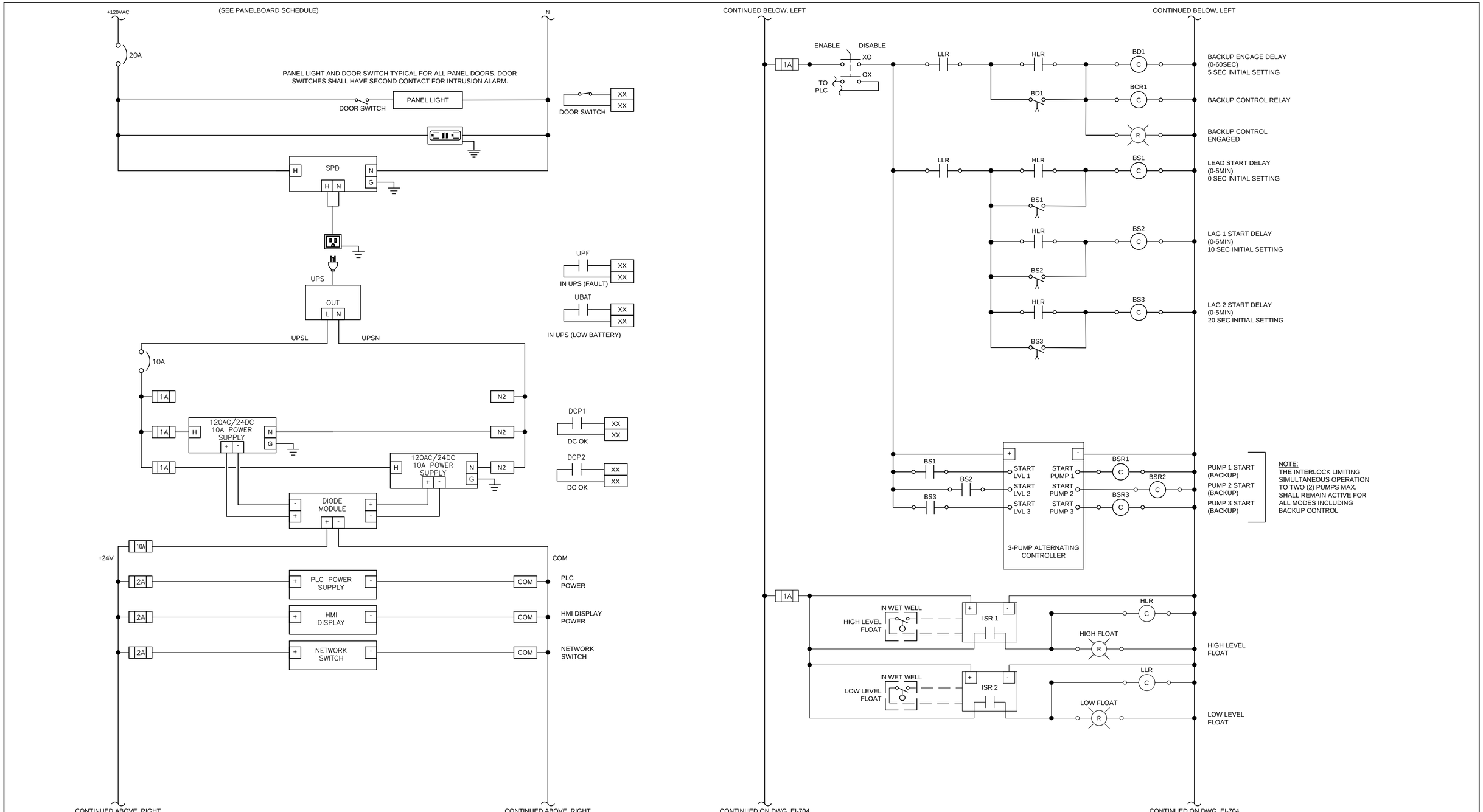

Revision	By	Appd.	YY.MM.DD

Issued	By	Appd.	YY.MM.DD
ISSUED 75% DESIGN DRAWINGS TO CITY (PRELIM REVIEW)	SAH	RC	21.05.17
ISSUED FINAL DESIGN	SAH	RC	20.02.14
ISSUED 60% DESIGN DRAWINGS	KME	APPROVED	18.03.14

Consultants

Stantec

5801 Pelican Bay Boulevard, Suite 300
Naples, FL 34108
www.stantec.com

ECE
Erickson Consulting Engineers

7201 Delainey Court
Sarasota, FL 32420
www.ericksonconsultingengineers.com

Copyright Reserved
The Contractor shall verify and be responsible for all dimensions. DO NOT scale the drawing - any errors or omissions shall be reported to Erickson Consulting Engineers (ECE) without delay.
The Copyrights to all designs and drawings are the property of ECE. Reproduction or use for any purpose other than that authorized by ECE is forbidden.

Client/Project
CITY OF NAPLES
735 8th St S
NAPLES, FL.
Naples Beach Restoration & Water Quality Improvement Project

File Name: 10606ei-704.dwg

BCB	JN	BCB	2022.04
Dwn.	Chkd.	Dsgn.	YYYY.MM

Title
CONTROL PANEL
ELEMENTARY SCHEMATIC 2

Project No. 177310606
Scale NO SCALE
Revision
Drawing No. EI-704

ORIGINAL SHEET - ANSI D

\\uat\306_gpfs01\shared_projects\177310606\drawings\set03-SouthSystem\active\instrumentation\10606ei-704.dwg
2022/03/31 2:04 PM By: Kearney, Denise

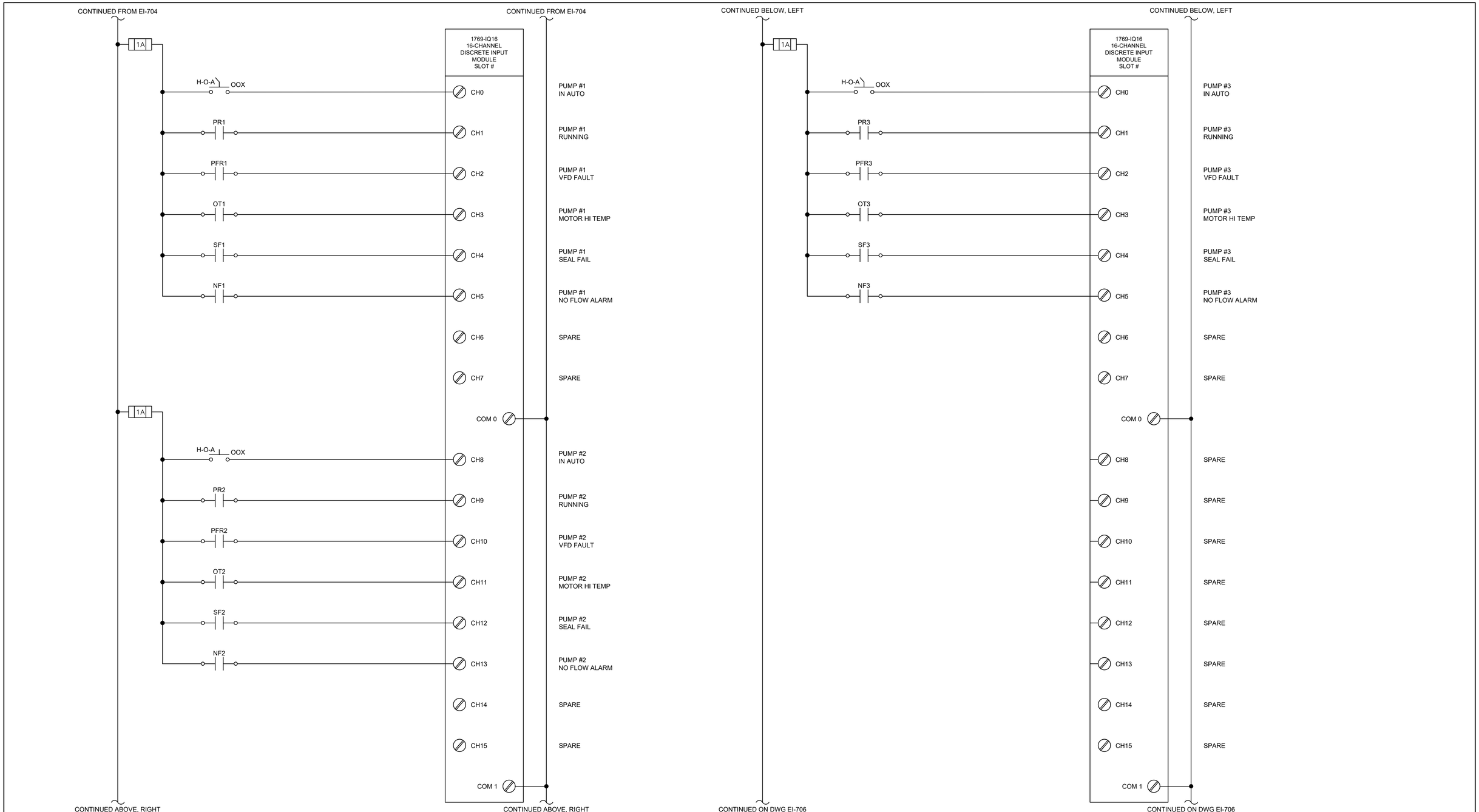

Revision	By	Appd.	YY.MM.DD

Issued	By	Appd.	YY.MM.DD
ISSUED 75% DESIGN DRAWINGS TO CITY (PRELIM REVIEW)	SAH	RC	21.05.17
ISSUED FINAL DESIGN	SAH	RC	20.02.14
ISSUED 60% DESIGN DRAWINGS	KME	APPROVED	18.03.14

Consultants

Stantec

5801 Pelican Bay Boulevard, Suite 300
Naples, FL 34108
www.stantec.com

ECE
Erickson Consulting Engineers

7201 Delainey Court
Sarasota, FL 32420
www.ericksonconsultingengineers.com

Copyright Reserved
The Contractor shall verify and be responsible for all dimensions. DO NOT scale the drawing - any errors or omissions shall be reported to Erickson Consulting Engineers (ECE) without delay.
The Copyrights to all designs and drawings are the property of ECE. Reproduction or use for any purpose other than that authorized by ECE is forbidden.

Client/Project

CITY OF NAPLES
735 8th St S
NAPLES, FL.

Naples Beach Restoration & Water Quality Improvement Project

File Name: 10606ei-706.dwg

BCB	JN	BCB	2022.04
Dwn.	Chkd.	Dsgn.	YYYY.MM

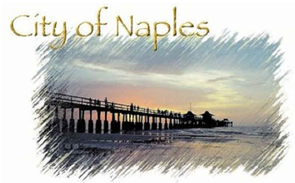

Title

CONTROL PANEL
ELEMENTARY SCHEMATIC 4

Project No. 177310606

Scale NO SCALE

Revision

Drawing No. EI-706

\\usd226-pefs01\shared_projects\177310606\drawings\all\01-SouthSystem\active\instrumentation\10606ei-706.dwg
2022/03/31 2:10 PM By: Kearney, Denise

ORIGINAL SHEET - ANSI D

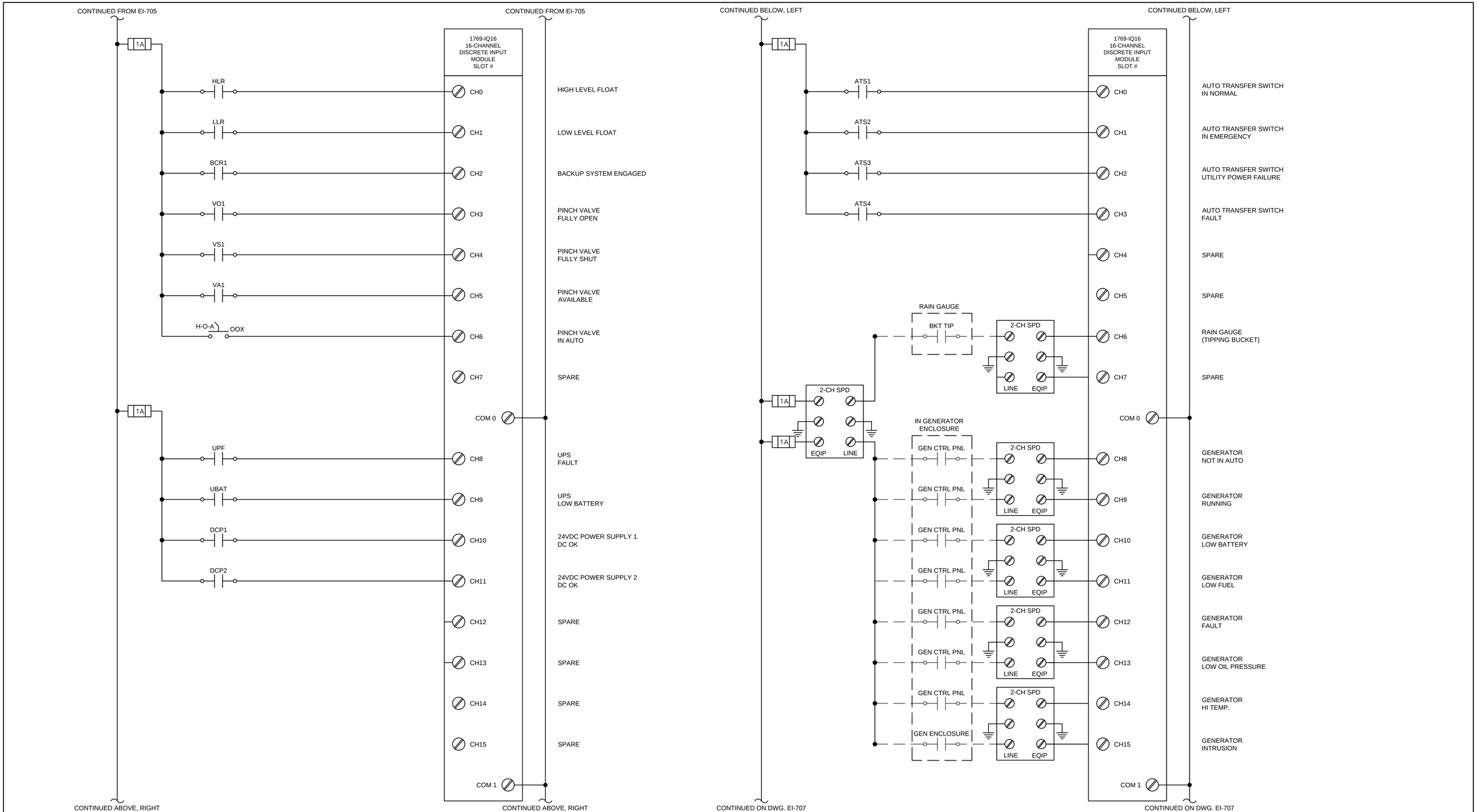

Revision	By	Appd.	YY.MM.DD

Issued	By	Appd.	YY.MM.DD
ISSUED 75% DESIGN DRAWINGS TO CITY (PRELIM REVIEW)	SAH	RC	21.05.17
ISSUED FINAL DESIGN	SAH	RC	20.02.14
ISSUED 60% DESIGN DRAWINGS	KME	APPROVED	18.03.14

Consultants

Stantec

5801 Pelican Bay Boulevard, Suite 300
Naples, FL 34108
www.stantec.com

ECE
Erickson Consulting Engineers

7201 Delainey Court
Sarasota, FL 32420
www.ericksonconsultingengineers.com

Copyright Reserved

The Contractor shall verify and be responsible for all dimensions. DO NOT scale the drawing - any errors or omissions shall be reported to Erickson Consulting Engineers (ECE) without delay.
The Copyrights to all designs and drawings are the property of ECE. Reproduction or use for any purpose other than that authorized by ECE is forbidden.

Client/Project

CITY OF NAPLES
735 8th St S
NAPLES, FL.

Naples Beach Restoration & Water Quality Improvement Project

File Name: 10606ei-707.dwg

BCB	JN	BCB	2022.04
Dwn.	Chkd.	Dsgn.	YYYY.MM

Title

CONTROL PANEL
ELEMENTARY SCHEMATIC 5

Project No. 177310606

Scale NO SCALE

Revision

Drawing No. EI-707

\\uscd06-pwfp01\brand_projects\177310606\drawings\set02-SouthSystem\active\instrumentation\10606ei-707.dwg
2022/03/31 2:13 PM By: Keatinky, Denise

ORIGINAL SHEET - ANSI D

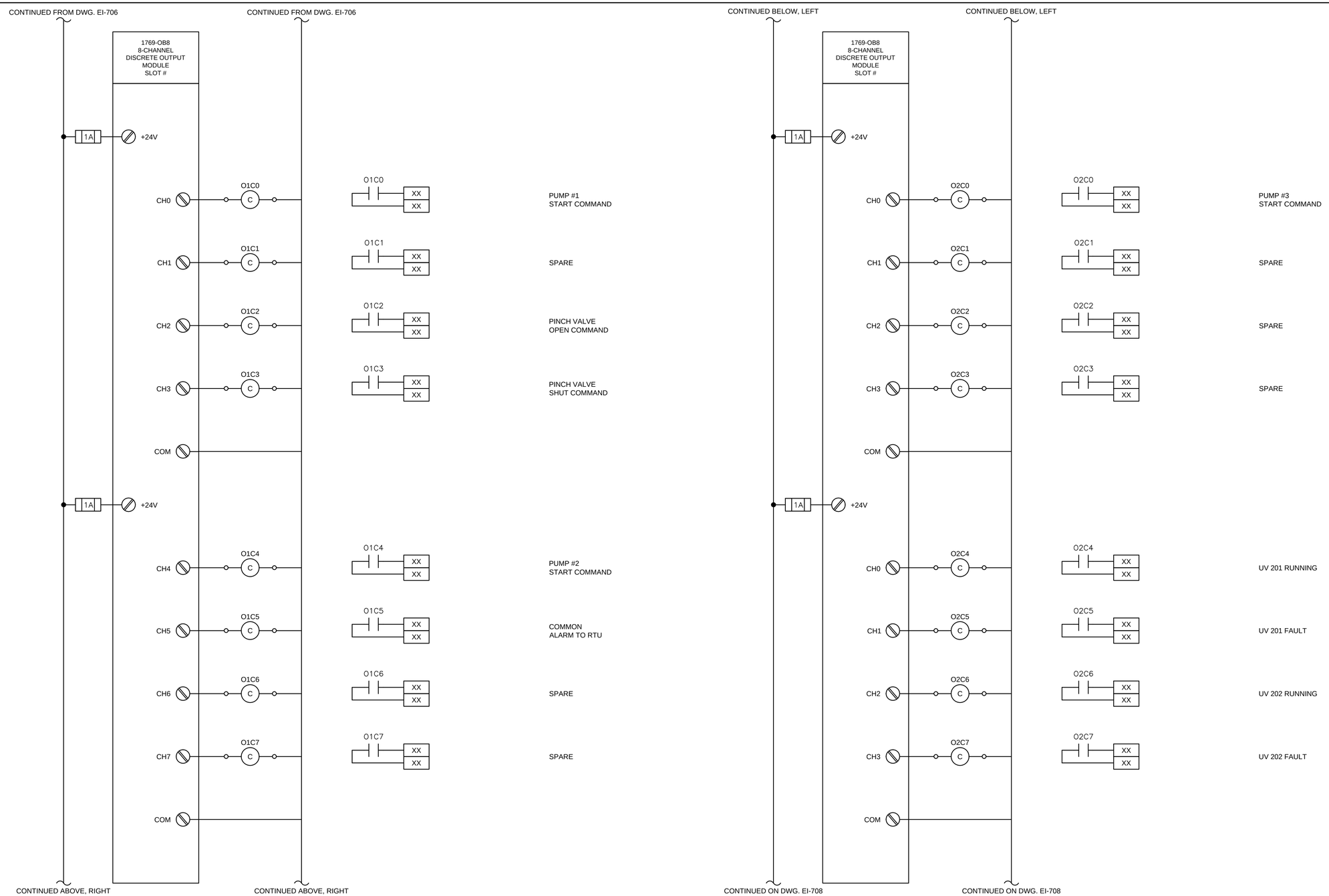

Revision	By	Appd.	YY.MM.DD

Issued	By	Appd.	YY.MM.DD
ISSUED 75% DESIGN DRAWINGS TO CITY (PRELIM REVIEW)	SAH	RC	21.05.17
ISSUED FINAL DESIGN	SAH	RC	20.02.14
ISSUED 60% DESIGN DRAWINGS	KME	APPROVED	18.03.14

Consultants

Stantec

5801 Pelican Bay Boulevard, Suite 300
Naples, FL 34108
www.stantec.com

ECE
Erickson Consulting Engineers

7201 Delainey Court
Sarasota, FL 32420
www.ericksonconsultingengineers.com

Copyright Reserved
The Contractor shall verify and be responsible for all dimensions.
DO NOT scale the drawing - any errors or omissions shall be reported
to Erickson Consulting Engineers (ECE) without delay.
The Copyrights to all designs and drawings are the property of ECE.
Reproduction or use for any purpose other than that authorized by ECE is forbidden.

Client/Project

CITY OF NAPLES
735 8th St S
NAPLES, FL.

Naples Beach Restoration
& Water Quality
Improvement Project

File Name: 10606ei-708.dwg

DLS	JN	BCB	2022.04
Dwn.	Chkd.	Dsgn.	YYYY.MM

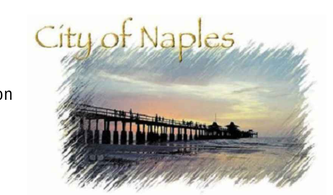

Title

CONTROL PANEL
ELEMENTARY SCHEMATIC 6

Project No. 177310606

Scale NO SCALE

Revision

Drawing No. EI-708

\\uscd226-prefs01\shared_projects\177310606\drawings\set03-SouthSystem\active\instrumentation\10606ei-708.dwg
2022/03/31 2:16 PM By: Keatiney, Denise

ORIGINAL SHEET - ANSI D

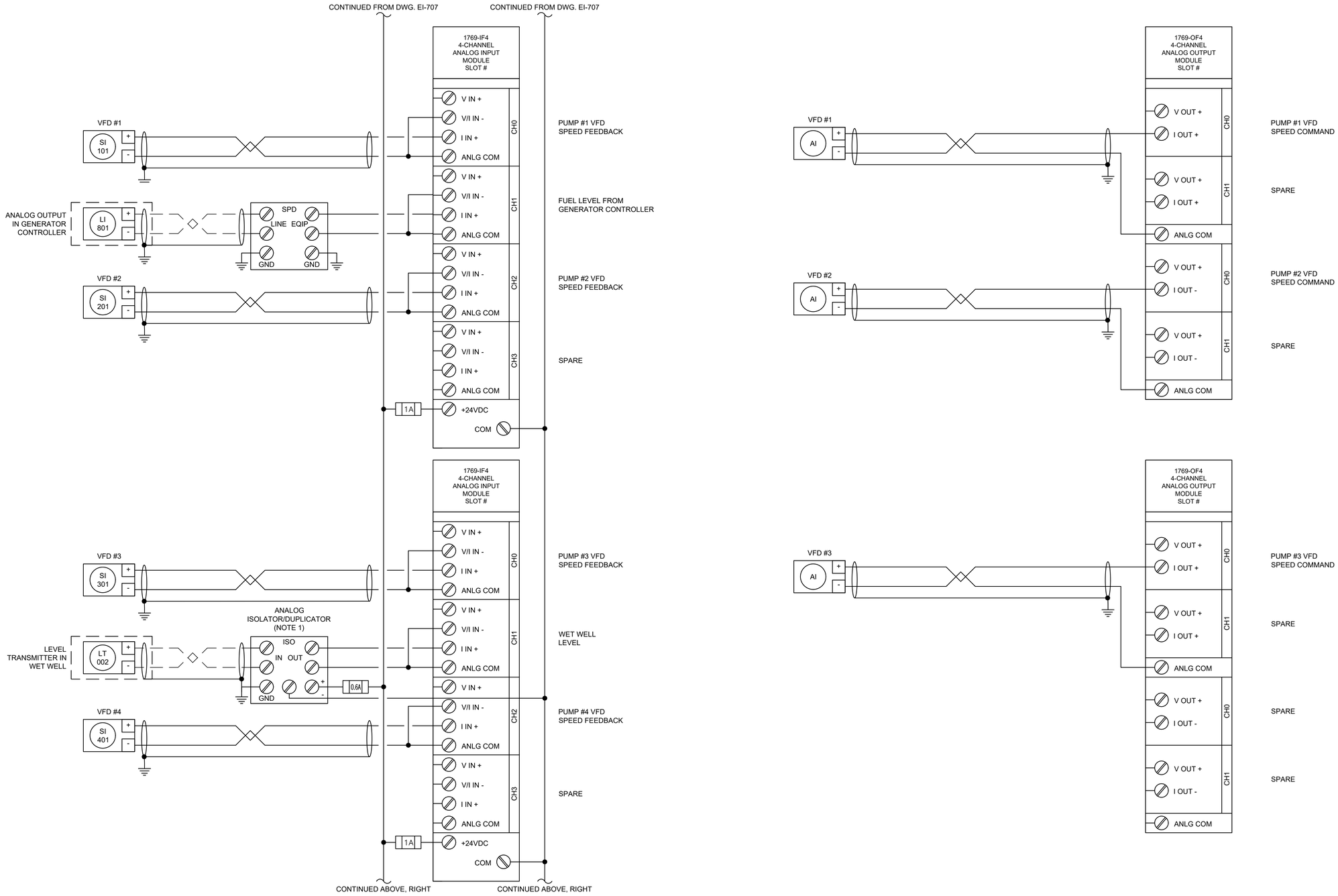

NOTE:

1. PROVIDE ANALOG SIGNAL ISOLATOR /DUPLICATOR. SECOND SIGNAL SHALL GO TO TELEMETRY TERMINALS FOR RTU.

Revision	By	Appd.	YY.MM.DD

Issued	By	Appd.	YY.MM.DD
ISSUED 75% DESIGN DRAWINGS TO CITY (PRELIM REVIEW)	SAH	RC	21.05.17
ISSUED FINAL DESIGN	SAH	RC	20.02.14
ISSUED 60% DESIGN DRAWINGS	KME	APPROVED	18.03.14

Consultants

Stantec

5801 Pelican Bay Boulevard, Suite 300
Naples, FL 34108
www.stantec.com

ECE
Erickson Consulting Engineers

7201 Delainey Court
Sarasota, FL 32420
www.ericksonconsultingengineers.com

Copyright Reserved
The Contractor shall verify and be responsible for all dimensions. DO NOT scale the drawing - any errors or omissions shall be reported to Erickson Consulting Engineers (ECE) without delay.
The Copyrights to all designs and drawings are the property of ECE. Reproduction or use for any purpose other than that authorized by ECE is forbidden.

Client/Project

CITY OF NAPLES
735 8th St S
NAPLES, FL.

Naples Beach Restoration & Water Quality Improvement Project

File Name: 10606ei-709.dwg

DLS	JN	BCB	2022.04
Dwn.	Chkd.	Dsgn.	YYYY.MM

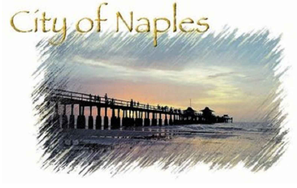

Title

CONTROL PANEL
ELEMENTARY SCHEMATIC 7

Project No. 177310606

Scale NO SCALE

Revision

Drawing No. EI-709

\\us0226-srv9a01\shared_projects\177310606\drawings\ae01-SouthSystem\active\instrumentation\10606ei-709.dwg
2022/03/31 2:20 PM By: Delaney, Denise

ORIGINAL SHEET - ANSI D

VFD SCHEMATIC
(TYPICAL OF 3)

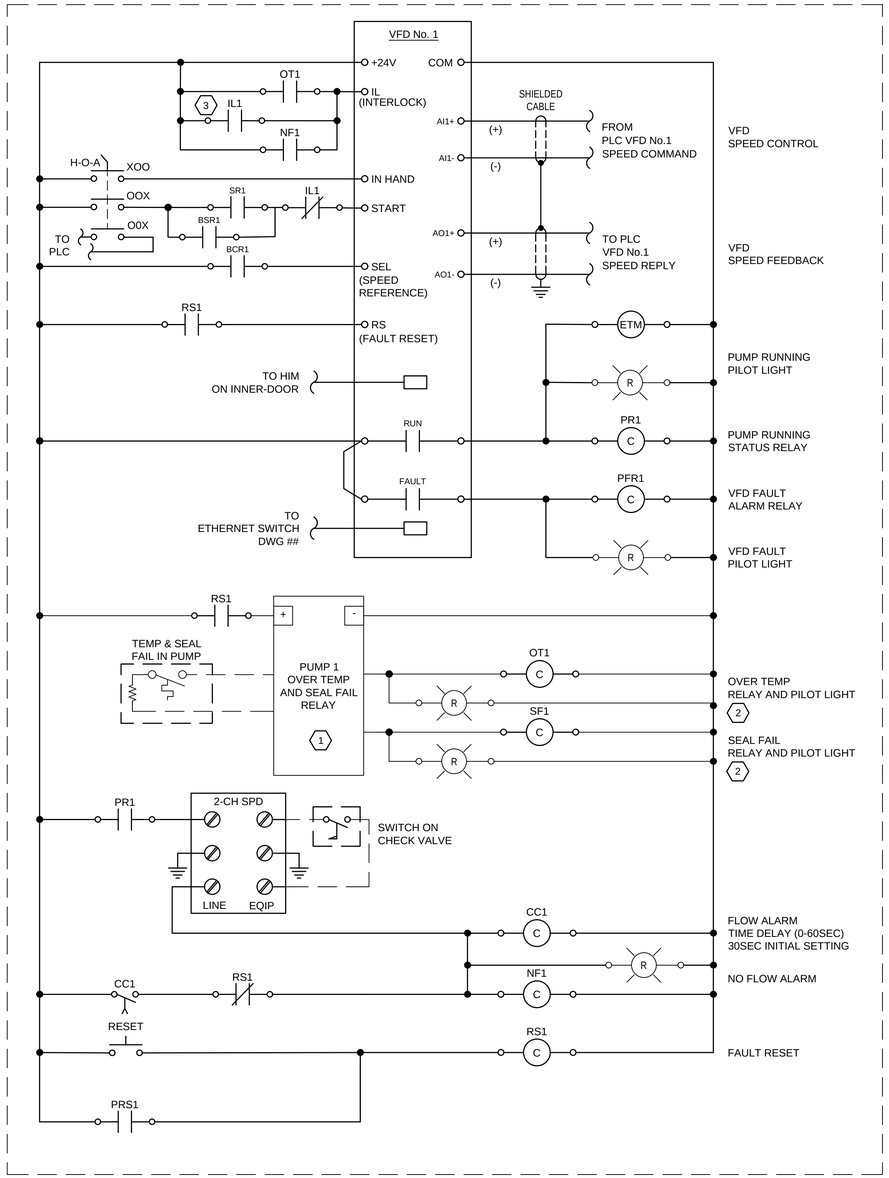

KEYED NOTES:

1. OVER-TEMP AND SEAL FAIL DETECTION AS REQUIRED BY PUMP MANUFACTURER.
2. SEPARATE PILOT LIGHTS ARE NOT REQUIRED IF THEY ARE INTEGRAL TO A PUMP PROTECTION RELAY MOUNTED ON THE CONTROL PANEL INNER DOOR.
3. THE PUMP INTERLOCK SHALL PREVENT OPERATION OF THREE PUMPS SIMULTANEOUSLY.

Revision	By	Appd.	YY.MM.DD

Issued	By	Appd.	YY.MM.DD
ISSUED 75% DESIGN DRAWINGS TO CITY (PRELIM REVIEW)	SAH	RC	21.05.17
ISSUED FINAL DESIGN	SAH	RC	20.02.14
ISSUED 60% DESIGN DRAWINGS	KME	APPROVED	18.03.14

Consultants

Stantec

5801 Pelican Bay Boulevard, Suite 300
Naples, FL 34108
www.stantec.com

ECE
Erickson Consulting Engineers

7201 Delainey Court
Sarasota, FL 32420
www.ericksonconsultingengineers.com

Copyright Reserved

The Contractor shall verify and be responsible for all dimensions.
DO NOT scale the drawing - any errors or omissions shall be reported
to Erickson Consulting Engineers (ECE) without delay.
The Copyrights to all designs and drawings are the property of ECE.
Reproduction or use for any purpose other than that authorized by ECE is forbidden.

Client/Project

CITY OF NAPLES
735 8th St S
NAPLES, FL.

Naples Beach Restoration
& Water Quality
Improvement Project

File Name: 10606ei-710.dwg

DLS	JN	BCB	2022.04
Dwn.	Chkd.	Dsgn.	YYYY.MM

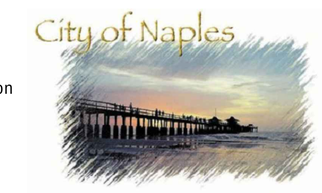

Title

CONTROL PANEL
ELEMENTARY SCHEMATIC 8

Project No. 177310606

Scale NO SCALE

Revision

Drawing No. EI-710

I:\us0235-pnfed01\shared_projects\177310606\drawings\ser02-SouthSystem\active\instrumentation\10606ei-710.dwg
2022/03/12 2:22 PM By: Keahey Denise

ORIGINAL SHEET - ANSI D

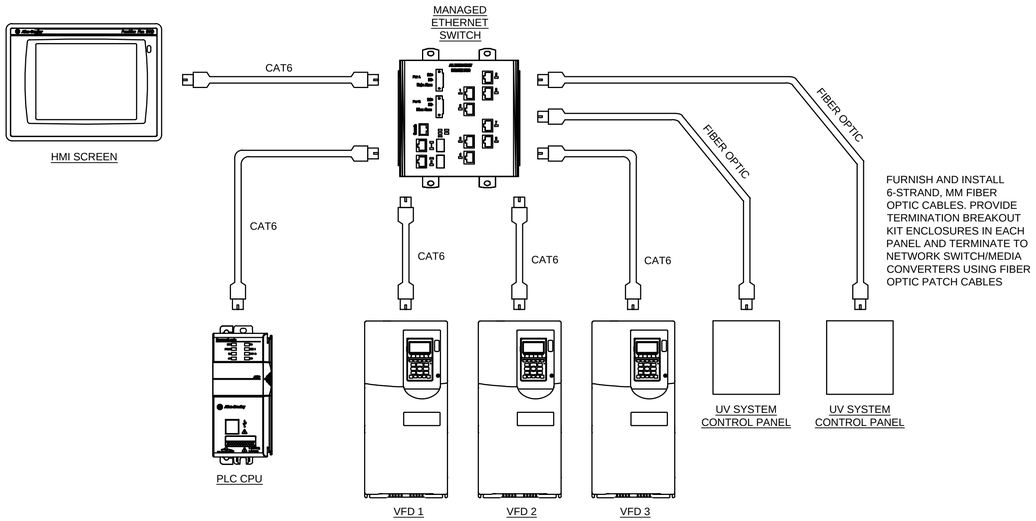

NETWORK DIAGRAM

NO SCALE

TELEMETRY CONTACTS (CONTINUED)

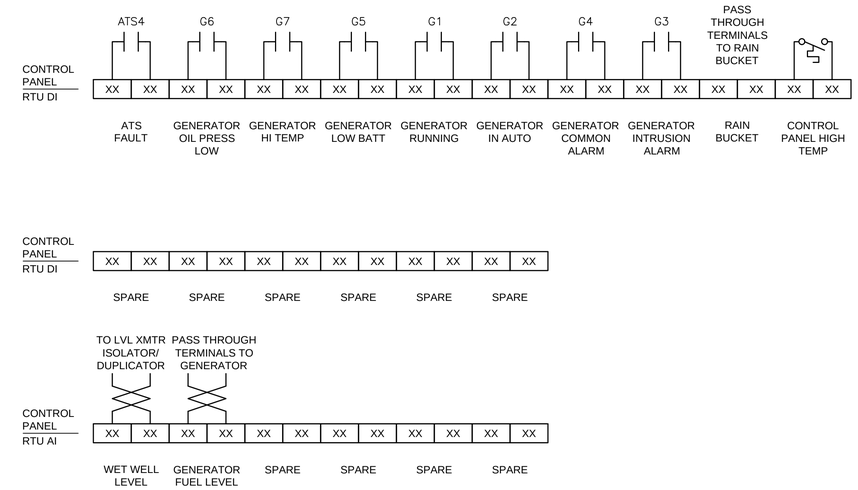

TELEMETRY CONTACTS

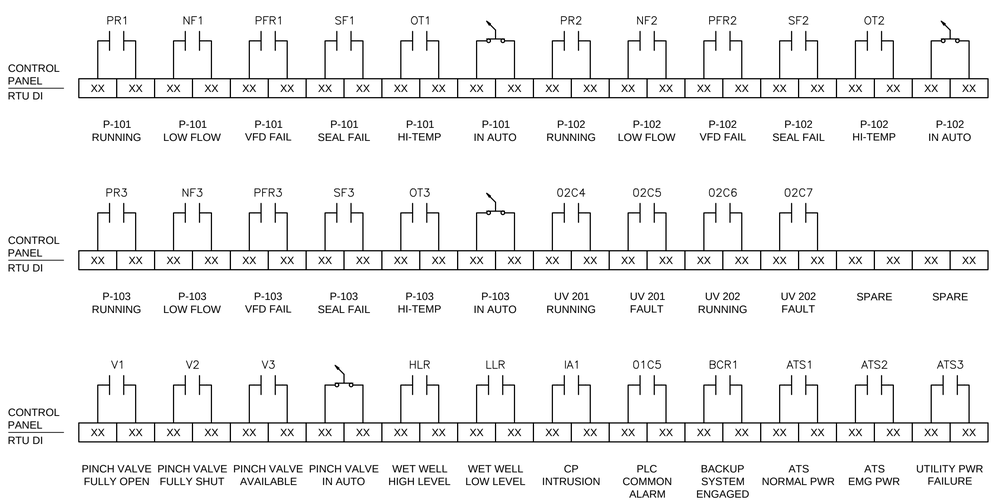

Revision	By	Appd.	YY.MM.DD

Issued	By	Appd.	YY.MM.DD
ISSUED 75% DESIGN DRAWINGS TO CITY (PRELIM REVIEW)	SAH	RC	21.05.17
ISSUED FINAL DESIGN	SAH	RC	20.02.14
ISSUED 60% DESIGN DRAWINGS	KME	APPROVED	18.03.14

Consultants

Stantec

5801 Pelican Bay Boulevard, Suite 300
Naples, FL 34108
www.stantec.com

ECE
Erickson Consulting Engineers

7201 Delainey Court
Sarasota, FL 32420
www.ericksonconsultingengineers.com

Copyright Reserved
The Contractor shall verify and be responsible for all dimensions. DO NOT scale the drawing - any errors or omissions shall be reported to Erickson Consulting Engineers (ECE) without delay.
The Copyrights to all designs and drawings are the property of ECE. Reproduction or use for any purpose other than that authorized by ECE is forbidden.

Client/Project
CITY OF NAPLES
735 8th St S
NAPLES, FL.
Naples Beach Restoration & Water Quality Improvement Project

File Name: 10606ei-711.dwg

DLS	:N	BCB	2022.04
Dwn.	Chkd.	Dsgn.	YYYY.MM

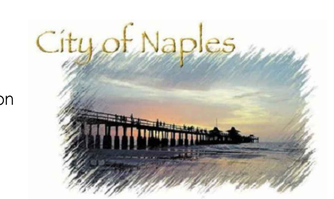

Title
CONTROL PANEL
ELEMENTARY SCHEMATIC

Project No. 177310606
Scale NO SCALE
Revision
Drawing No. EI-711

\\us0226.ggrid01\shared_projects\177310606\drawings\ue60\SouthSystem\active\instrumentation\10606ei-711.dwg
2022/03/31 2:25 PM By: Kearney, Denise

ORIGINAL SHEET - ANSI D

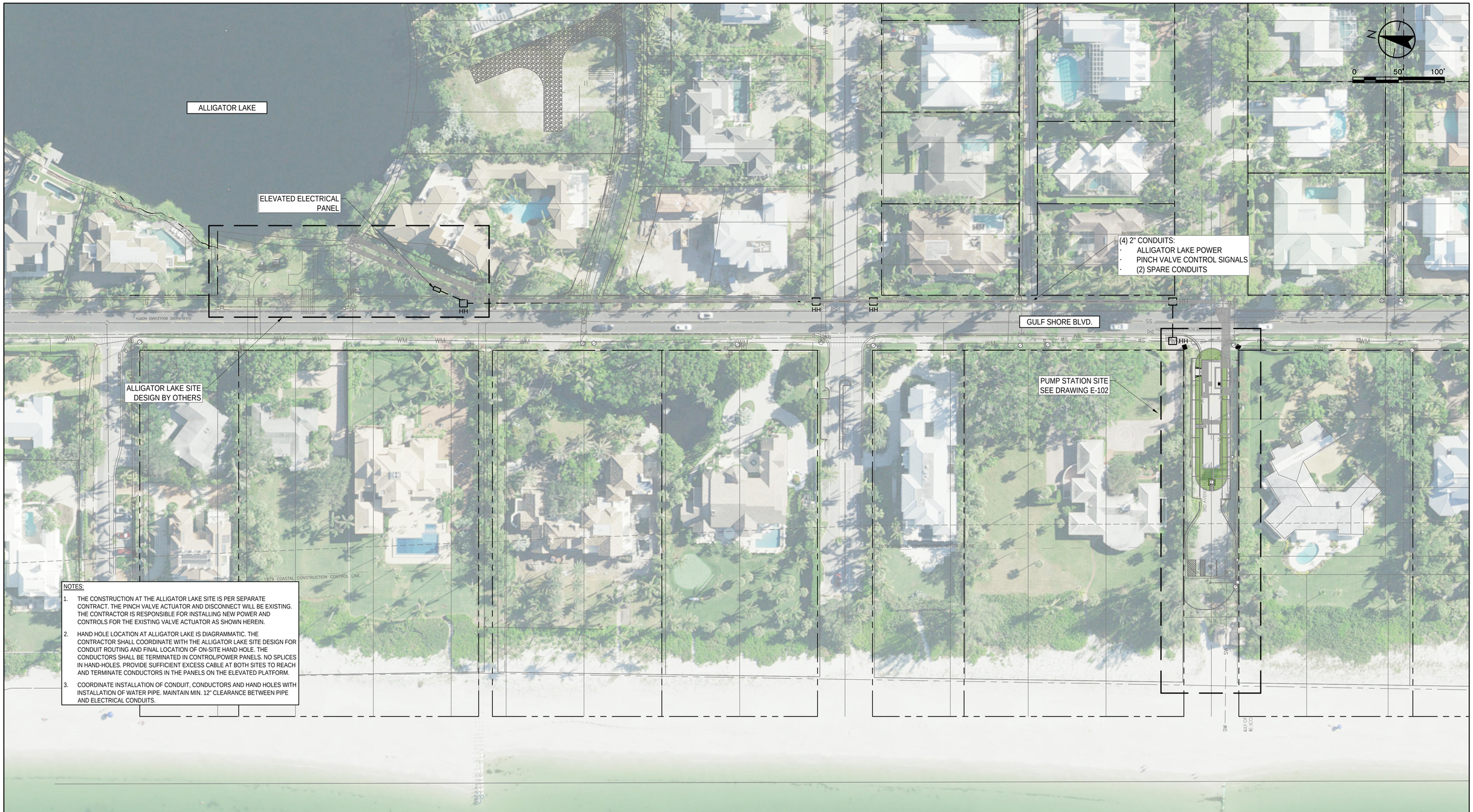

NOTES:

1. THE CONSTRUCTION AT THE ALLIGATOR LAKE SITE IS PER SEPARATE CONTRACT. THE PINCH VALVE ACTUATOR AND DISCONNECT WILL BE EXISTING. THE CONTRACTOR IS RESPONSIBLE FOR INSTALLING NEW POWER AND CONTROLS FOR THE EXISTING VALVE ACTUATOR AS SHOWN HEREIN.
2. HAND HOLE LOCATION AT ALLIGATOR LAKE IS DIAGRAMMATIC. THE CONTRACTOR SHALL COORDINATE WITH THE ALLIGATOR LAKE SITE DESIGN FOR CONDUIT ROUTING AND FINAL LOCATION OF ON-SITE HAND HOLE. THE CONDUCTORS SHALL BE TERMINATED IN CONTROL/POWER PANELS. NO SPLICES IN HAND-HOLES. PROVIDE SUFFICIENT EXCESS CABLE AT BOTH SITES TO REACH AND TERMINATE CONDUCTORS IN THE PANELS ON THE ELEVATED PLATFORM.
3. COORDINATE INSTALLATION OF CONDUIT, CONDUCTORS AND HAND HOLES WITH INSTALLATION OF WATER PIPE. MAINTAIN MIN. 12" CLEARANCE BETWEEN PIPE AND ELECTRICAL CONDUITS.

Revision	By	Appd.	YY.MM.DD
1 CITY OF NAPLES COMMENTS	KME	APPROVED	18.07.12

Issued	By	Appd.	YY.MM.DD
ISSUED 75% DESIGN DRAWINGS TO CITY [PRELIM REVIEW]	SAH	RC	21.05.17
ISSUED FINAL DESIGN	SAH	RC	20.02.14
ISSUED 60% DESIGN DRAWINGS	KME	APPROVED	18.03.14

Consultants

Stantec

5801 Pelican Bay Boulevard, Suite 300
Naples, FL 34108
www.stantec.com

ECE
Erickson Consulting Engineers

7201 Delainey Court
Sarasota, FL 32420
www.ericksonconsultingengineers.com

Copyright Reserved
The Contractor shall verify and be responsible for all dimensions. DO NOT scale the drawing - any errors or omissions shall be reported to Erickson Consulting Engineers (ECE) without delay.
The Copyrights to all designs and drawings are the property of ECE. Reproduction or use for any purpose other than that authorized by ECE is forbidden.

Client/Project
CITY OF NAPLES
735 8th St S
NAPLES, FL.
Naples Beach Restoration & Water Quality Improvement Project

File Name: 10606_E-101.dwg

DLS	JN	BCB	2022.04
Dwn.	Chkd.	Dsgn.	YYYY.MM

City of Naples

Title
OVERALL ELECTRICAL SITE PLAN

Project No. 177310606
Scale 1" = 50'-0"
Revision
Drawing No. E-101

\\wst0204.wpfdc01\shared_projects\177319606\drawings\wst01-South\system\active\electrical\sheet\10606_E-101.dwg
2022/03/31 12:43 PM By: Kearney, Denise

ORIGINAL SHEET - ANSI D

GENERAL NOTES:

A. THIS DRAWING IS DIAGRAMMATIC IN NATURE TO CONVEY DESIGN INTENT. MULTIPLE CONDUITS IN THE SAME TRENCH/DUCTBANK ARE REPRESENTED AS SINGLE LINE. COORDINATE REQUIREMENTS WITH ONE-LINE, AND INSTRUMENTATION DIAGRAMS. THE CONTRACTOR SHALL COORDINATE WITH OTHER DISCIPLINES TO ENSURE NO CONFLICTS BEFORE INSTALLING CONDUIT.

B. CONDUITS INSTALLED UNDER ROADWAYS AND DRIVEWAYS SHALL BE ENCASED IN CONCRETE.

KEYED NOTES:

1. REPLACE EXISTING OVERHEAD SERVICE TO FP&L OWNED LIGHT WITH NEW UNDERGROUND SERVICE. COORDINATE WORK WITH FP&L. FP&L WILL REMOVE OVERHEAD LINE. THE CONTRACTOR SHALL FURNISH AND INSTALL SERVICE CONNECTION PULLBOX AND UNDERGROUND CONDUIT TO EXISTING SERVICE DISCONNECT. FP&L WILL FURNISH AND INSTALL CONDUCTORS.
2. FURNISH AND INSTALL PRIMARY ELECTRICAL CONDUIT IN ACCORDANCE WITH FP&L STANDARDS. FP&L WILL FURNISH AND INSTALL PRIMARY CABLES.
3. FP&L WILL FURNISH TRANSFORMER PAD FOR THE CONTRACTOR TO INSTALL. FP&L WILL FURNISH AND INSTALL TRANSFORMER.
4. REFER TO CIVIL DETAIL FOR INSTRUMENT PORT.
5. FURNISH AND INSTALL WALL MOUNTED JUNCTION BOX IN VALVE VAULT. JUNCTION BOX SHALL BE RATED FOR SUBMERSION.
6. REFER TO LIGHTING PLAN FOR SITE LIGHTING. ADDITIONAL CONDUITS WILL BE REQUIRED FOR LIGHTING.
7. CONTRACTOR SHALL RUN 2-6" CONDUITS FROM THE OVERHEAD/UNDERGROUND TRANSITION POINT AT THE FP&L POWER POLE TO THE NEW ON SITE UTILITY TRANSFORMER. CONTRACTOR TO COORDINATE WITH FP&L FOR THE LOCATION OF THE POWER POLE.
8. FURNISH AND INSTALL LIGHTNING PROTECTION SYSTEM IN ACCORDANCE WITH PROJECT SPECIFICATIONS.
9. REFER TO DRAWING E-101 FOR QUANTITY AND SIZE OF CONDUITS RUNNING TO ALLIGATOR LAKE. FURNISH AND INSTALL SEPARATE PULL BOXES FOR CONTROL, POWER, AND FIBER CONDUITS.
10. CONDUIT FOR FUTURE FIBER CONNECTION SHALL TERMINATE IN A SEPARATE HAND HOLE LOCATED AT THE CORNER OF THE PUMP STATION SITE AND GULF SHORE BLVD.

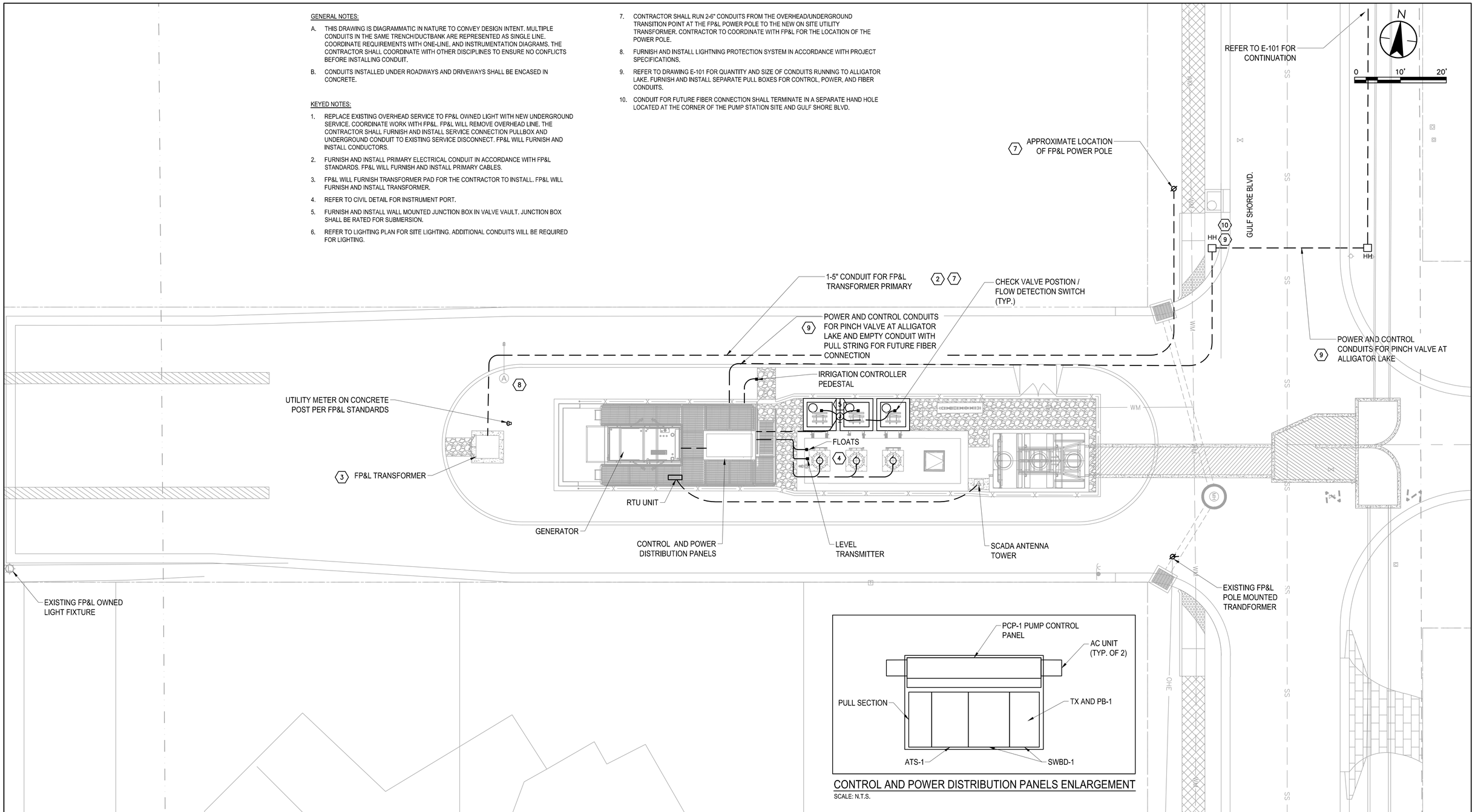

CONTROL AND POWER DISTRIBUTION PANELS ENLARGEMENT

SCALE: N.T.S.

Revision	By	Appd.	YY.MM.DD
1 CITY OF NAPLES COMMENTS	KME	APPROVED	18.07.12

Issued	By	Appd.	YY.MM.DD
ISSUED 75% DESIGN DRAWINGS TO CITY (PRELIM REVIEW)	SAH	RC	21.05.17
ISSUED FINAL DESIGN	SAH	RC	20.02.14
ISSUED 60% DESIGN DRAWINGS	KME	APPROVED	18.03.14

Consultants

Stantec

5801 Pelican Bay Boulevard, Suite 300
Naples, FL 34108
www.stantec.com

ECE Erickson Consulting Engineers

7201 Delainey Court
Sarasota, FL 32420
www.ericksonconsultingengineers.com

Copyright Reserved

The Contractor shall verify and be responsible for all dimensions. DO NOT scale the drawing - any errors or omissions shall be reported to Erickson Consulting Engineers (ECE) without delay.
The Copyrights to all designs and drawings are the property of ECE. Reproduction or use for any purpose other than that authorized by ECE is forbidden.

Client/Project

CITY OF NAPLES
735 8th St S
NAPLES, FL.

Naples Beach Restoration & Water Quality Improvement Project

File Name: 10606_E-102.dwg

DLS	JN	BCB	2022.04
Dwn.	Chkd.	Dsgn.	YYYY.MM

Title

PUMP STATION
ELECTRICAL SITE PLAN

Project No. 177310606

Scale 1"= 10'-0"

Revision

Drawing No. E-102

\\us1223s-pvfsp01\shared_projects\177310606\drawings\us01 South\system\active\electrical\sheet\10606_E-102.dwg
2022/04/01 12:07 PM By: Lafarga, Mike

ORIGINAL SHEET - ANSI D

LUMENPOD®16

PROJECT NAME: _____

REP AGENCY: _____

APPROX. QUANTIT Y: _____

SCAN QR CODE
for technical information, downloads, instructions,
and system configuration guides

PART NUMBER BUILDER

LULFAMB703	LULF	AMB	70	5
EXAMPLE	FIXTURE TYPE	WILDLIFE AMBER	OPTIC	DRIVE CURRENT
Light cannot be visible from the beach to be turtle friendly. The minimum amount of illumination for safety standards must be used.	LULF - Lumenpod 16		16 - 16° beam 23 - 23° beam 46 - 46° beam *70 - 70° beam * Indicates stock	*5 - 500 mA *3 - 350 mA

ELECTRICAL SPECIFICATIONS

All electrical connections to be made by a qualified electrician in accordance with all national, state and local electrical codes.	24VDC	ETL LISTED WET, IK10, IP67, CE	0-10V INPUT	-40°F TO +120°F
	INPUT VOLTAGE	CERTIFICATIONS	DIMMING	OPERATING TEMP
	CLASS 2 REQUIRED	5 YEARS	UP TO 99 Lm/W LED	NA
	DRIVER	WARRANTY	EFFICIENCY	CRI

CONSTRUCTION

WIRE LEADS

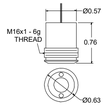

The Lumenpod's threaded stainless steel body dissipates heat directly into the mounting material. A machined shoulder positions it nearly flush with any diameter hand rail, as well as flat or square stock.

PHOTOMETRICS

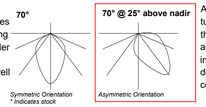

Symmetric Orientation
** Indicates stock*

Asymmetric Orientation

Asymmetric performance can be fine tuned on fabricated systems by rotating the fixture around the rail diameter. A 25° angle provides superb illumination results in most applications. IES reports to view or download are available by scanning the QR code or visiting our website.

LED DRIVER & NEMA ENCLOSURE OPTIONS

Wagner offers multiple ETL listed options for both 24VDC power supplies and NEMA enclosures. Quantities and types will be configured based on your specifications and design. Additional specification options are available by request. Not all options apply to all products, please verify compatibility with the factory.

CLASS II DRIVERS:
- STD 100W
- Dali, DMX, 0-10V Dimming Protocols
- Multiple Wattages
- Made in USA Units Available

NEMA ENCLOSURES:
4X - Plastic, Painted
Steel or Stainless Steel

LUMENPOST™
Integrated 100W, 0-10V DIM

Specifications may change without prior notice, verify data at time of order, all rights reserved

WAGNER ARCHITECTURAL SYSTEMS
888.243.6914 // SYSTEMS@MAILWAGNER.COM
10600 West Brown Deer Road // Milwaukee, WI 53224, USA

© 2018 R&B WAGNER, INC.

WAGNERARCHITECTURAL.COM
LULF SUBM A1

REBELLE ARCHITECTURAL LIGHTING

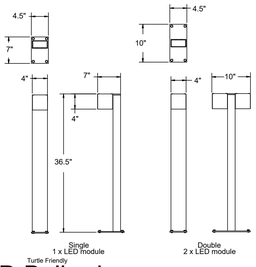

Tessera 3151LED Bollard

EXTERIOR

MODEL	LED MODULE		VOLT	COLOR TEMPERATURE	DISTRIBUTION	OPTIONS		COLOR	
3151	1x10L	10 watts1 887 lumens2	120*	AM amber LED turtle friendly 585-595nm	FL 30° flood	DIM	0-10 volt dimming	WT	white texture
	1x7L	7 watts1 633 lumens2	208			CV	cut off visor	BT	black texture
	2x10L	2 x 10 watts1 2 x 887 lumens2	240			PC	photocontrol	SM	silver metallic
	2x7L	2 x 7 watts1 2 x 633 lumens2	277			TN	tenon mount	AN	aluminum natural
						BCS	base cover	BZ	bronze
						CF	provision for 1/2" conduit feed	GM	gunmetal
								WS	white satin
								BM	black matte
								RAL	specify no.

**Standard configuration unless otherwise specified* **Nominal LED Power ²Source lumens*

SAMPLE CATALOG NUMBER: 3151 - 1x10L - AM - 120 - FL - WT
Using this catalog number would order 1 single head model 3151 bollard luminaire with a 10 watt amber LED module, flood optic, wired to 120 volts, painted white texture polyester powder coat.

CONSTRUCTION

Materials
All aluminum construction, stainless steel tamper resistant hardware, silicone lens.

Electrical Components
Constant current driver 350mA or 250mA, -30°C starting temperature.

MOUNTING

The 3151LED series is designed to mount to a concrete base (by others). Anchor bolts are provided in hot dipped galvanized finish for new construction build. For optional retrofit builds, no anchor bolts would be provided and bollard can be mounted with hilti type fasteners (hilti anchors and hardware by others). Base plate is welded to bollard shaft. Base cover is offered as an option. Tenon mount is offered as an option for concealed mounting hardware.

OPTICAL

The 3151LED luminaire uses a precision molded lens to direct the light with a flood distribution. The luminaire comes standard with honeycomb louver.

PROTECTION

The 3151LED series is listed for use in wet locations to UL and CSA Standards. L70 (minimum) >50,000 hours. IP65 rated optical compartment.

Wildlife Lighting
Certification Number 2018-040

www.rebellelighting.com

© 2018 REBELLE All rights reserved. R18 Specifications subject to change without notice.

LIGHTING SCHEDULE

SYMBOL	FIXTURE	TOTAL NUMBER OF EACH FIXTURE	BULB LUMENS OUTPUT AND TYPE	TYPE OF MOUNT	MOUNTING HEIGHT
	TESSERA 315 LED	6	887 LM, AMBER LED TURTLE FRIENDLY 585-595NM	POLE MOUNT	3'-0"
	LUMENPOD 16	23	99 LM WILDLIFE AMBER LED	HANDRAIL MOUNT	3'-0"

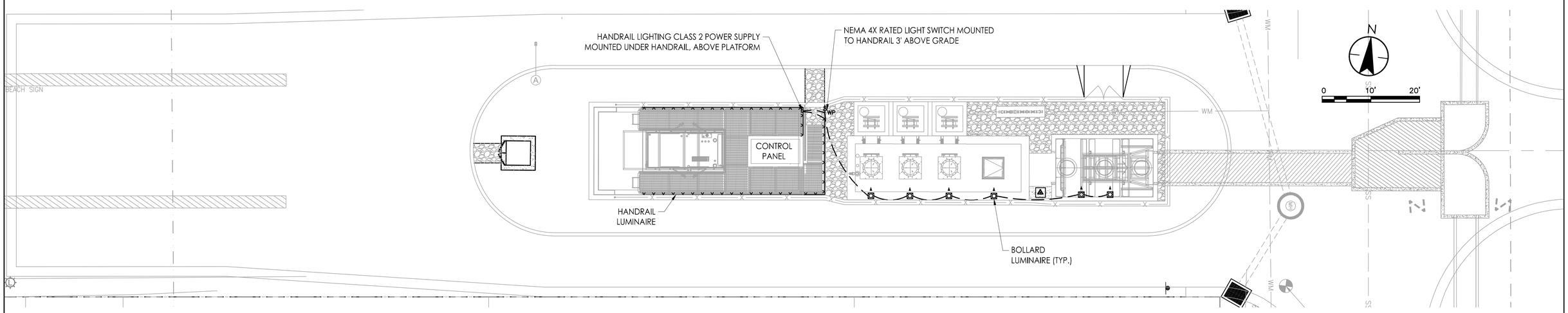

Revision	By	Appd.	YY.MM.DD
1 CITY OF NAPLES COMMENTS	KME	APPROVED	18.07.12

Issued	By	Appd.	YY.MM.DD
ISSUED 75% DESIGN DRAWINGS TO CITY (PRELIM REVIEW)	SAH	RC	21.05.17
ISSUED FINAL DESIGN	SAH	RC	20.02.14
ISSUED 60% DESIGN DRAWINGS	KME	APPROVED	18.03.14

Consultants

Stantec
5801 Pelican Bay Boulevard, Suite 300
Naples, FL 34108
www.stantec.com

ECE Erickson Consulting Engineers
7201 Delainey Court
Sarasota, FL 32420
www.ericksonconsultingengineers.com

Copyright Reserved
The Contractor shall verify and be responsible for all dimensions. DO NOT scale the drawing - any errors or omissions shall be reported to Erickson Consulting Engineers (ECE) without delay.
The Copyrights to all designs and drawings are the property of ECE. Reproduction or use for any purpose other than that authorized by ECE is forbidden.

Client/Project
CITY OF NAPLES
735 8th St S
NAPLES, FL.
Naples Beach Restoration & Water Quality Improvement Project

File Name: 10606_E-103.dwg

DLS	BCB	BCB	2022.04
Dwn.	Chkd.	Dsgn.	YYYY.MM

Title
PUMP STATION
LIGHTING PLAN

Project No. 177310606
Scale 1" = 10'-0"
Revision
Drawing No. E-103

\\usr022g-erpfs01\shared_projects\177310606\drawings\ver01 SouthSystem\active\electrical\sheet\10606_E-103.dwg
2022/04/01 12:02 PM By: Lizarazo, Mike

ORIGINAL SHEET - ANSI D

GENERAL NOTES:

A. THIS DRAWING IS DIAGRAMMATIC IN NATURE TO CONVEY DESIGN INTENT. MULTIPLE CONDUITS IN THE SAME TRENCH/DUCTBANK ARE REPRESENTED AS SINGLE LINE. COORDINATE REQUIREMENTS WITH ONE-LINE, AND INSTRUMENTATION DIAGRAMS. THE CONTRACTOR SHALL COORDINATE WITH OTHER DISCIPLINES TO ENSURE NO CONFLICTS BEFORE INSTALLING CONDUIT.

B. FURNISH AND INSTALL LIGHTNING PROTECTION SYSTEM IN ACCORDANCE WITH PROJECT SPECIFICATIONS.

C. ALL METALLIC PARTS SHALL BE BONDED TO GROUND IN ACCORDANCE WITH THE NEC.

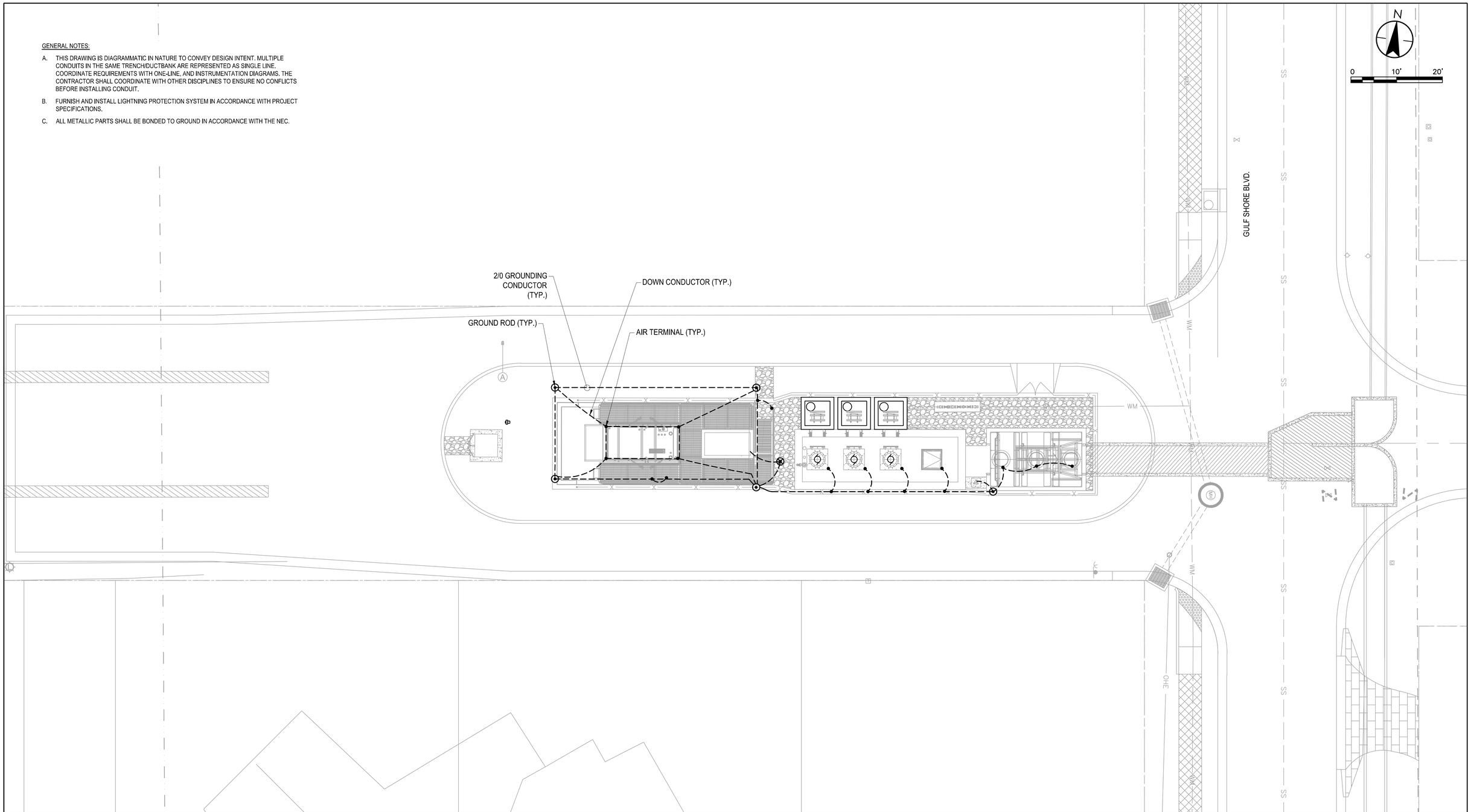

Revision	By	Appd.	YY.MM.DD
1 CITY OF NAPLES COMMENTS	KME	APPROVED	18.07.12

Issued	By	Appd.	YY.MM.DD
ISSUED 75% DESIGN DRAWINGS TO CITY (PRELIM REVIEW)	SAH	RC	21.05.17
ISSUED FINAL DESIGN	SAH	RC	20.02.14
ISSUED 60% DESIGN DRAWINGS	KME	APPROVED	18.03.14

Consultants

Stantec

5801 Pelican Bay Boulevard, Suite 300
Naples, FL 34108
www.stantec.com

ECE
Erickson Consulting Engineers

7201 Delainey Court
Sarasota, FL 32420
www.ericksonconsultingengineers.com

Copyright Reserved
The Contractor shall verify and be responsible for all dimensions. DO NOT scale the drawing - any errors or omissions shall be reported to Erickson Consulting Engineers (ECE) without delay.
The Copyrights to all designs and drawings are the property of ECE. Reproduction or use for any purpose other than that authorized by ECE is forbidden.

Client/Project

CITY OF NAPLES
735 8th St S
NAPLES, FL.

Naples Beach Restoration & Water Quality Improvement Project

File Name: 10606_E-102.dwg

BCB		BCB	2022.04
Dwn.	Chkd.	Dsgn.	YYYY.MM

Title

PUMP STATION
GROUNDING PLAN

Project No. 177310606

Scale 1"= 10'-0"

Revision

Drawing No. E-104

\\us0226-prfs01\shared_projects\177310606\drawings\us01 South\plan\active\electrical\sheet\10606_E-102.dwg
2022/04/01 12:06 PM By: Lafarga, Mike

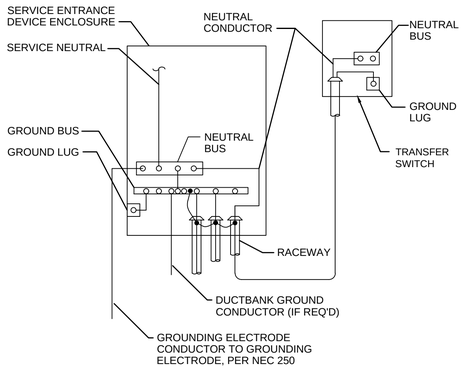

1 SERVICE GROUNDING
NON-SEPARATELY DERIVED SOURCE
Scale: N.T.S.

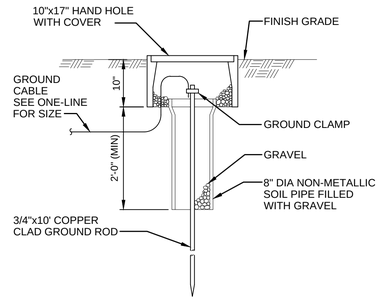

2 GROUND ROD AND WELL
Scale: N.T.S.

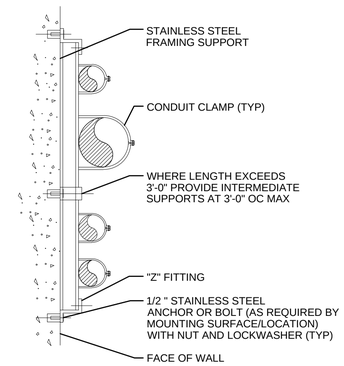

3 CONDUIT SUPPORT
FLUSH MOUNT
Scale: N.T.S.

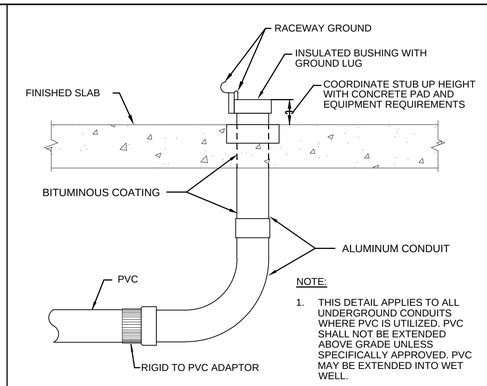

NOTE:
1. THIS DETAIL APPLIES TO ALL UNDERGROUND CONDUITS WHERE PVC IS UTILIZED. PVC SHALL NOT BE EXTENDED ABOVE GRADE UNLESS SPECIFICALLY APPROVED. PVC MAY BE EXTENDED INTO WET WELL.

4 TYPICAL CONDUIT STUB-UP
Scale: N.T.S.

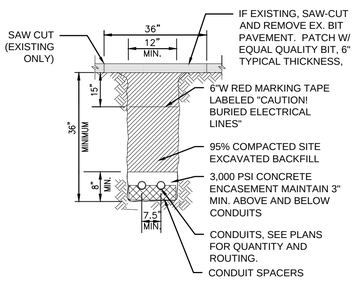

UNDER DRIVEWAYS OR AREAS SUBJECT TO VEHICULAR TRAFFIC

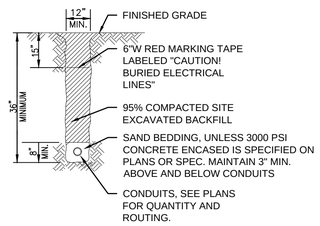

LANDSCAPED AREAS

NOTES:
1. CONDUITS FOR FP&L PRIMARY CONDUCTORS SHALL BE INSTALLED PER FP&L STANDARD.
2. CONDUITS UNDER EXISTING ROADWAY SHALL BE INSTALLED USING DIRECTIONAL BORE.

5 TYPICAL CONDUIT TRENCH
Scale: N.T.S.

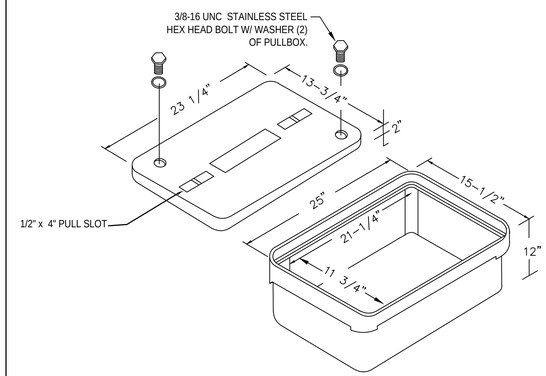

NOTES:
1. THE DIMENSIONS HEREIN ARE TYPICAL. PULL BOXES SHALL BE SIZED IN ACCORDANCE WITH NEC ARTICLE 314, BASED ON THE QUANTITY, SIZE AND CONFIGURATION OF CONDUITS ENTERING THE BOX.
2. ALL PULL BOXES SHALL HAVE AN OPEN-BOTTOM, QUAZITE POLYMER CONCRETE DESIGN WITH A MINIMUM COMPRESSIVE STRENGTH OF 2,500 PSI AT TWENTY EIGHT (28) DAYS. POLYMER CONCRETE PULL BOX SHALL BE QUAZITE PRODUCT NO. PG1324BA12 OR APPROVED EQUIVALENT.
3. ALL PULL BOX COVERS FURNISHED AND INSTALLED SHALL BE POLYMER CONCRETE QUAZITE PRODUCT NO. PG1324HH00 TIER 22, OR APPROVED EQUIVALENT.
4. PULL BOXES, JUNCTION BOXES, AND ALL ELECTRICAL WORK MUST CONFORM TO N.E.C. (LATEST REQUIREMENTS), AND THE NATIONAL ELECTRICAL SAFETY CODE.
5. PULL BOXES FOR FP&L SERVICE CONDUCTORS SHALL BE IN ACCORDANCE WITH FP&L STANDARDS

6 TYPICAL PULL BOX \ HAND HOLE DETAIL
Scale: N.T.S.

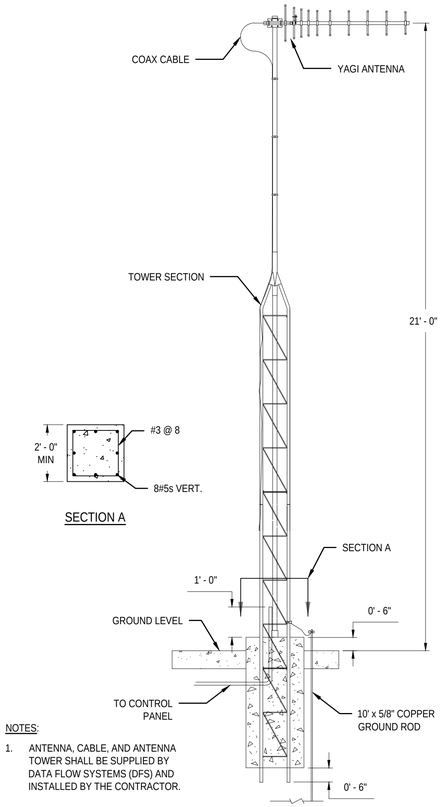

NOTES:
1. ANTENNA, CABLE, AND ANTENNA TOWER SHALL BE SUPPLIED BY DATA FLOW SYSTEMS (DFS) AND INSTALLED BY THE CONTRACTOR.

7 SCADA ANTENNA DETAIL
Scale: N.T.S.

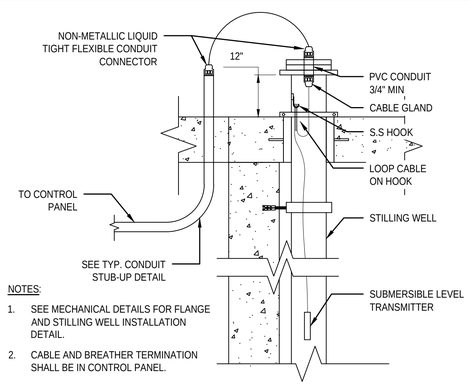

NOTES:
1. SEE MECHANICAL DETAILS FOR FLANGE AND STILLING WELL INSTALLATION DETAIL.
2. CABLE AND BREATHER TERMINATION SHALL BE IN CONTROL PANEL.

8 LEVEL TRANSMITTER DETAIL
Scale: N.T.S.

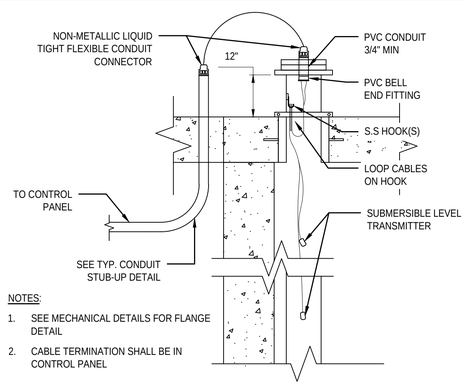

NOTES:
1. SEE MECHANICAL DETAILS FOR FLANGE DETAIL
2. CABLE TERMINATION SHALL BE IN CONTROL PANEL

9 FLOAT INSTALLATION DETAIL
Scale: N.T.S.

Revision	By	Appd.	YY.MM.DD

Issued	By	Appd.	YY.MM.DD
ISSUED 75% DESIGN DRAWINGS TO CITY (PRELIM REVIEW)	SAH	RC	21.05.17
ISSUED FINAL DESIGN	SAH	RC	20.02.14
ISSUED 60% DESIGN DRAWINGS	KME	APPROVED	18.03.14

Consultants

Stantec
5801 Pelican Bay Boulevard, Suite 300
Naples, FL 34108
www.stantec.com

ECE Erickson Consulting Engineers
7201 Delainey Court
Sarasota, FL 32420
www.ericksonconsultingengineers.com

Copyright Reserved
The Contractor shall verify and be responsible for all dimensions. DO NOT scale the drawing - any errors or omissions shall be reported to Erickson Consulting Engineers (ECE) without delay.
The Copyrights to all designs and drawings are the property of ECE. Reproduction or use for any purpose other than that authorized by ECE is forbidden.

Client/Project
CITY OF NAPLES
735 8th St S
NAPLES, FL.
Naples Beach Restoration & Water Quality Improvement Project

File Name: 10606_E-501.dwg

DLS	JN	BCB	2022.04
Dwn.	Chkd.	Dsgn.	YYYY.MM

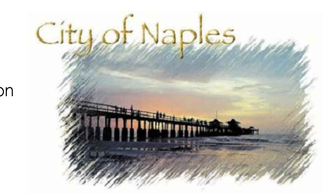

Title
ELECTRICAL DETAILS

Project No. 177310606
Scale 1" = 1'-0"
Revision
Drawing No. E-501

\\ca0204-prefs01\shared_projects\177310606\drawings\all\0-SouthSystem\active\electrical\sheet\10606_E-501.dwg
2022/03/31 1:23 PM By: Kearney, Denise
ORIGINAL SHEET - ANSI D

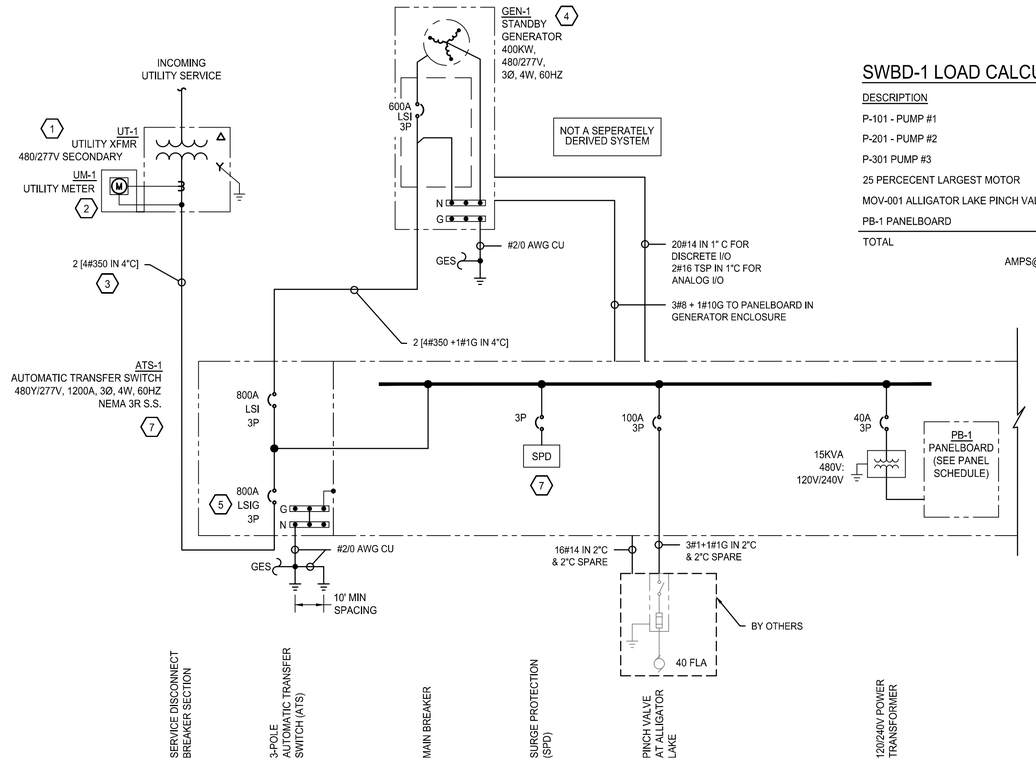

SWBD-1 LOAD CALCULATION (UTILITY)

DESCRIPTION	LOAD
P-101 - PUMP #1	142
P-201 - PUMP #2	142
P-301 PUMP #3	142
25 PERCECENT LARGEST MOTOR	36
MOV-001 ALLIGATOR LAKE PINCH VALVE	10
PB-1 PANELBOARD	8
TOTAL	480

AMPS@480VAC = 577

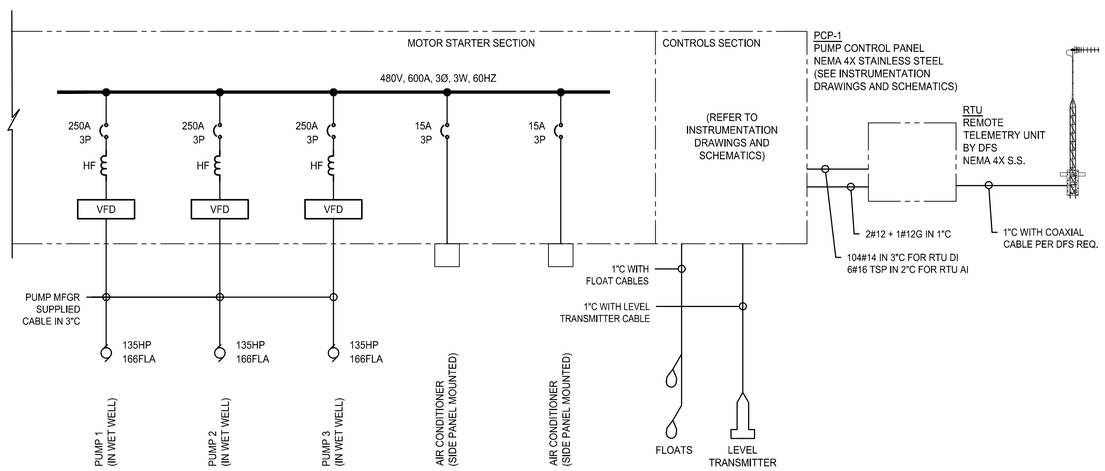

GENERAL NOTES:

A. FOR LEGEND, ABBREVIATIONS AND GENERAL NOTES SEE DRAWING E-001.

B. ONE-LINE DRAWING IS INTENDED ONLY TO REPRESENT CONNECTED LOADS. CONTRACTOR SHALL REFER TO PANELBOARDS SCHEDULES FOR CIRCUIT BREAKER DESIGNATION AND RATINGS.

C. ALL ELECTRICAL WORK SHALL COMPLY WITH THE LATEST NATIONAL ELECTRICAL CODE AND LOCAL CODES, WITH COUNTY AMENDMENTS.

D. ALL ELECTRICAL DISTRIBUTION EQUIPMENT PROVIDED UNDER THIS CONTRACT SHALL BE LISTED AND LABELED AS INDICATED WITHIN THEIR RESPECTIVE SPECIFICATION AND AS DEFINED IN ARTICLE 100 OF THE NEC CODE.

E. CONTRACTOR TO VERIFY MAXIMUM OVER CURRENT PROTECTION DEVICE SETTINGS WITH ACTUAL EQUIPMENT TO BE INSTALLED. INFORMATION MAY VARY PENDING FINAL SELECTION AND APPROVAL OF MECHANICAL AND PROCESS EQUIPMENT (PUMPS, MIXERS, MOTORS, UNIT HEATERS).

F. ALL FEEDERS SHALL BE NEW AND WITHOUT SPLICES.

KEY NOTES:

1. UTILITY TRANSFORMER, PAD AND TRANSFORMER GROUNDING TO BE PROVIDED BY UTILITY COMPANY AND INSTALLED BY THE CONTRACTOR.
2. THE CONTRACTOR SHALL FURNISH AND INSTALL METER SOCKET. PROVIDE METER SOCKET COORDINATE ALL WORK WITH UTILITY COMPANY.
3. SERVICE FEEDER. CONTRACTOR SHALL PROVIDE SECONDARY CONDUIT AND CONDUCTORS. UTILITY TO TERMINATE CONDUCTORS IN TRANSFORMER.
4. FURNISH AND INSTALLED GENERATOR IN SOUND ATTENUATED ENCLOSURE.
5. BREAKER SHALL INCLUDE GROUND FAULT PROTECTION FOR AND MAINTENANCE MODE FOR FAULT CURRENT REDUCTION.
6. THE GENERATOR SHALL COME WITH A 120/240V 3-WIRE PANELBOARD FOR POWER DISTRIBUTION TO ALL LOADS IN GENERATOR ENCLOSURE INCLUDING BUT NOT LIMITED TO THE BATTERY CHARGER LIGHTING, HEATERS.
7. THE AUTOMATIC TRANSFER SWITCH AND SWITCHBOARD LINE-UP SHALL BE RATED NEMA 3R (MIN), CONSTRUCTED OF STAINLESS STEEL. THE ENCLOSURE SHALL BE GASKETED WITH FILTERED VENTS AND BE CAPABLE OF WITHSTANDING HURRICANE FORCE WINDS AND WIND-BLOWN RAIN WITHOUT IMPACTING OPERATION.

PINCH VALVE FEEDER VOLTAGE DROP:

VOLTAGE	PH	CURRENT	TMP	POWER FACTOR	CONDUCTOR DESCRIPTION	LENGTH	EFFECTIVE Z NEC TABLE 9	VOLTAGE DROP
480V	3ϕ	40 AMPS	75C	0.8	3#1 CU IN PVC	1110 FT	0.179Ω/1000FT	13.6 = 2.8%

PANEL SCHEDULE

PANEL:	PB-1	AMPERE RATING:	100 A	MOUNTING:	IN SWBD-1
VOLTS:	120 /240	BUS MATERIAL:	COPPER	ENCLOSURE:	N/A
PHASE:	SINGLE-PHASE	MAIN DEVICE:	80 A	BREAKERS:	BOLT-ON
WIRE:	3-WIRE	SHORT CIRCUIT RATING:	10 kAIC		

LOAD DESCRIPTION	CON SIZE	WIRE SIZE	BKR	# DEM	PHASE LOAD KVA A	PHASE LOAD KVA B	DEM #	BKR	WIRE SIZE	CON SIZE	LOAD DESCRIPTION
SPD	-	-	-	- 1	0.00		100%	30A	#10	1"	GENERATOR LOAD CENTER
				100%	0.00		2				
				- 3		0.00	100%				
				100%		0.00	4				
PCP-1 CONTROL POWER	1"	#12	20A	N 5	0.50		100%	20A	#12	3/4"	RECEPTACLES (GFI)
				100%	0.36		6 R				
UV-401 CONTROL PANEL	1"	#10	20A	N 7		1.50	125%	20A	#12	3/4"	LIGHTING (GFI)
				100%		0.50	8 L				
				N 9	1.50		100%	20A	#12	3/4"	IRRIGATION CONTROLLER (GFI)
				100%	0.10		10 N				
UV-402 CONTROL PANEL	1"	#10	20A	N 11		1.50	100%	20A	#12	1"	SCADA RTU (DATA FLOW)
				100%		0.50	12 N				
				N 13	1.50		100%				
				100%	0.00		14				
				15		0.00	100%				
				100%		0.00	16				
				17	0.00		100%				
				100%	0.00		18				
				19		0.00	100%				
				100%		0.00	20				
				21	0.00		100%				
				100%	0.00		22				
				23		0.00	100%				
				100%		0.00	24				

TOTAL CONNECTED LOAD	3.96	4.00
DESIGN AND NEC DEMAND (25% CONT. LOADS NEC 210.20a, 25% LARGEST MOTOR NEC 220.14)	0.00	0.13
TOTAL CALCULATED NEC LOAD	3.96	4.13
PHASE AMPS	33.0	34.4

TOTAL LOAD: 8.08 kVA

Revision	By	Appd.	YY.MM.DD
1 CITY OF NAPLES COMMENTS	KME	APPROVED	18.07.12

Issued	By	Appd.	YY.MM.DD
ISSUED 75% DESIGN DRAWINGS TO CITY (PRELIM REVIEW)	SAH	RC	21.05.17
ISSUED FINAL DESIGN	SAH	RC	20.02.14
ISSUED 60% DESIGN DRAWINGS	KME	APPROVED	18.03.14

Consultants

Stantec

5801 Pelican Bay Boulevard, Suite 300
Naples, FL 34108
www.stantec.com

ECE
Erickson Consulting Engineers

7201 Delainey Court
Sarasota, FL 32420
www.ericksonconsultingengineers.com

Copyright Reserved
The Contractor shall verify and be responsible for all dimensions. DO NOT scale the drawing - any errors or omissions shall be reported to Erickson Consulting Engineers (ECE) without delay.
The Copyrights to all designs and drawings are the property of ECE. Reproduction or use for any purpose other than that authorized by ECE is forbidden.

Client/Project
CITY OF NAPLES
735 8th St S
NAPLES, FL.
Naples Beach Restoration & Water Quality Improvement Project

File Name: 10606_E-601.dwg

DLS	JN	BCB	2022.04
Dwn.	Chkd.	Dsgn.	YYYY.MM

Title
ELECTRICAL ONE-LINE DIAGRAM

Project No. 177310606
Scale NO SCALE
Revision
Drawing No. E-601

\\ca0225-ppfss01\shared_projects\177310606\drawings\ver01 SouthSystem\active\electrical\sheet\10606_E-601.dwg
2022/04/01 12:22 PM By: Latesia, Mike

ORIGINAL SHEET - ANSI D