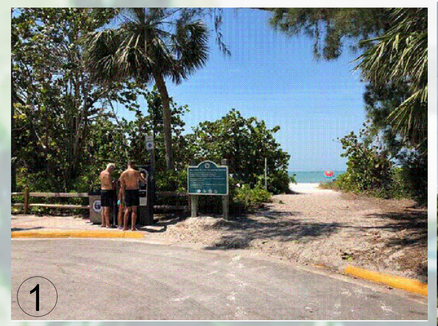

N

0 10' 20'

GULF SHORE BLVD N

3RD AVE N

1

3+00

2+00

1+00

0+00

25+00

26+00

ELEVATED ELECTRIC CONTROL PANEL

PUMP STATION

SCREENING CHAMBER

TEMPORARY WORKSPACE
(EQUIPMENT, VEHICLES, STORAGE)

Z:\CADD_Graphics\US Projects\16-329_Naples Outfalls_Phase II\Design\90_100%_Plans\16-329_Naples Outfalls_60-90% Drawings_Const. Access & Staging.dwg Apr 15, 2022 - 8:27am

Revision	By	Appd.	YY.MM.DD

Issued	By	Appd.	YY.MM.DD
ISSUED 90% DESIGN DRAWINGS TO CITY (PRELIM REVIEW)	KME	APPROVED	22.04.15
ISSUED 75% DESIGN DRAWINGS TO CITY (PRELIM REVIEW)	KME	APPROVED	21.05.13

Stantec

5801 Pelican Bay Boulevard, Suite 300
Naples, FL 34108
www.stantec.com

ECE
Erickson Consulting Engineers

7201 Delainey Court
Sarasota, FL 32420
www.ericksonconsultingengineers.com

Copyright Reserved

The Contractor shall verify and be responsible for all dimensions. DO NOT scale the drawing - any errors or omissions shall be reported to Erickson Consulting Engineers (ECE) without delay. The Copyrights to all designs and drawings are the property of ECE. Reproduction or use for any purpose other than that authorized by ECE is forbidden.

Client/Project

CITY OF NAPLES
735 8th St S
NAPLES, FL.

Naples Beach Restoration & Water Quality Improvement Project

File Name:
16-329_Naples Outfalls_60-90% Drawings_Const. Access & Staging.dwg

JAW	SMT	KME	21.06.01
Dwn.	Chkd.	Dsgn.	YY.MM.DD

Title

CONSTRUCTION ACCESS & STAGING PLAN
3RD AVE N

Project No.	Scale	
20-380	AS NOTED	
Drawing No.	Sheet	Revision
AS	1	0

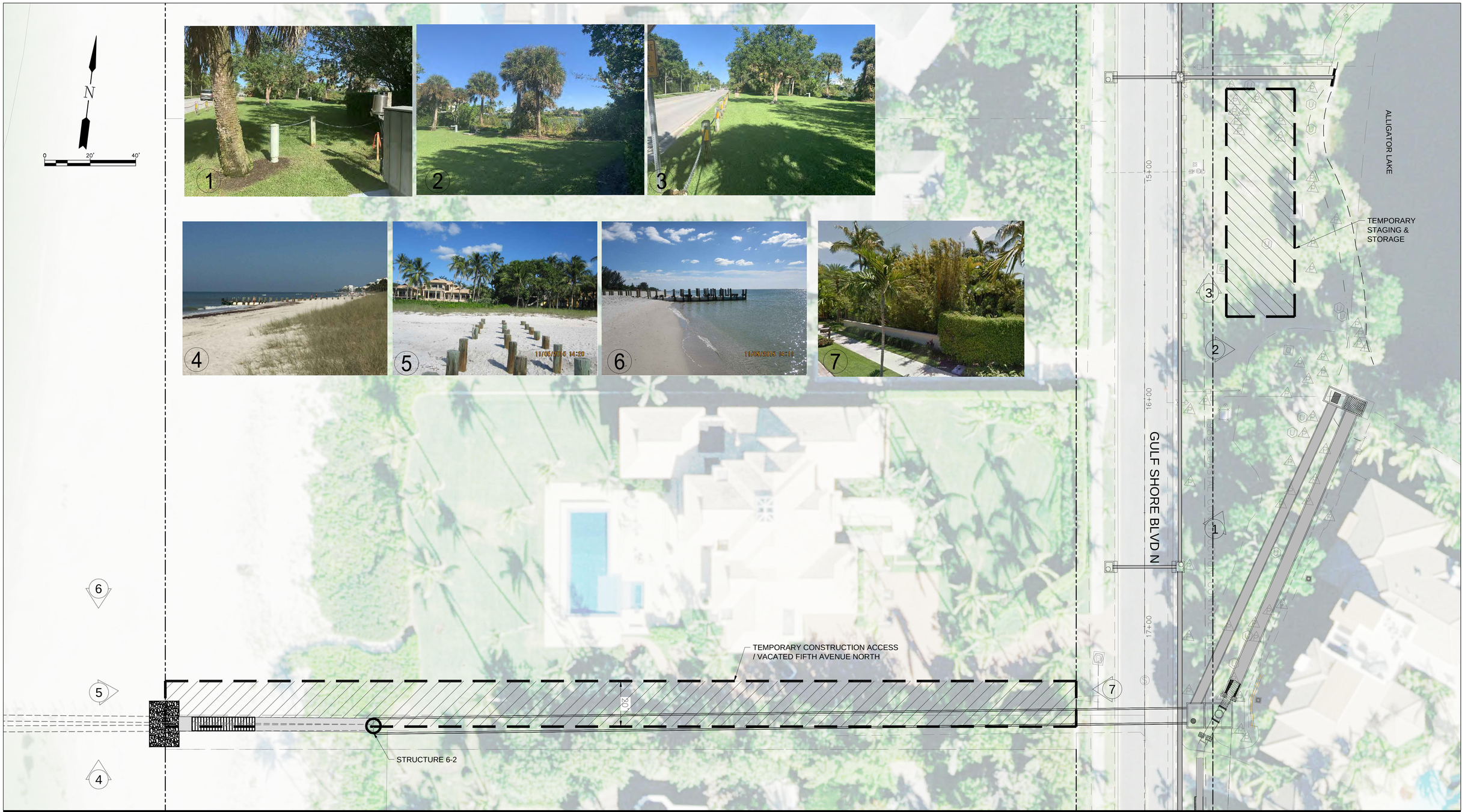

Revision	By	Appd.	YY.MM.DD

Issued	By	Appd.	YY.MM.DD
ISSUED 90% DESIGN DRAWINGS TO CITY (PRELIM REVIEW)	KME	APPROVED	22.04.15
ISSUED 75% DESIGN DRAWINGS TO CITY (PRELIM REVIEW)	KME	APPROVED	21.06.13

ECE
Erickson Consulting Engineers
7201 Delainey Court
Sarasota, FL 32420
www.ericksonconsultingengineers.com

Copyright Reserved
The Contractor shall verify and be responsible for all dimensions.
DO NOT scale the drawing - any errors or omissions shall be reported
to Erickson Consulting Engineers (ECE) without delay.
The Copyrights to all designs and drawings are the property of ECE.
Reproduction or use for any purpose other than that authorized by ECE is forbidden.

Client/Project
CITY OF NAPLES
735 8th St S
NAPLES, FL.
Naples Beach Restoration
& Water Quality
Improvement Project

File Name:
16-329_Naples Outfalls_60-90% Drawings_Const. Access & Staging.dwg

Dwn.	Chkd.	Dsgn.	YY.MM.DD
JAW	SMT	KME	21.06.01

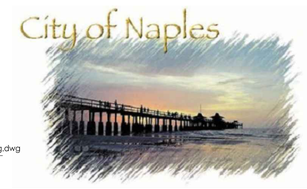

Title
CONSTRUCTION ACCESS
& STAGING PLAN
BEACH OVERFLOW STRUCTURE

Project No.	Scale	
20-380	AS NOTED	
Drawing No.	Sheet	Revision
AS	2	0

Z:\CADD_Graphics\US Projects\16-329_Naples Outfalls_Phase II\Design\90_100%_Plans\16-329_Naples Outfalls_60-90% Drawings_Const. Access & Staging.dwg Apr 15, 2022 - 8:27am

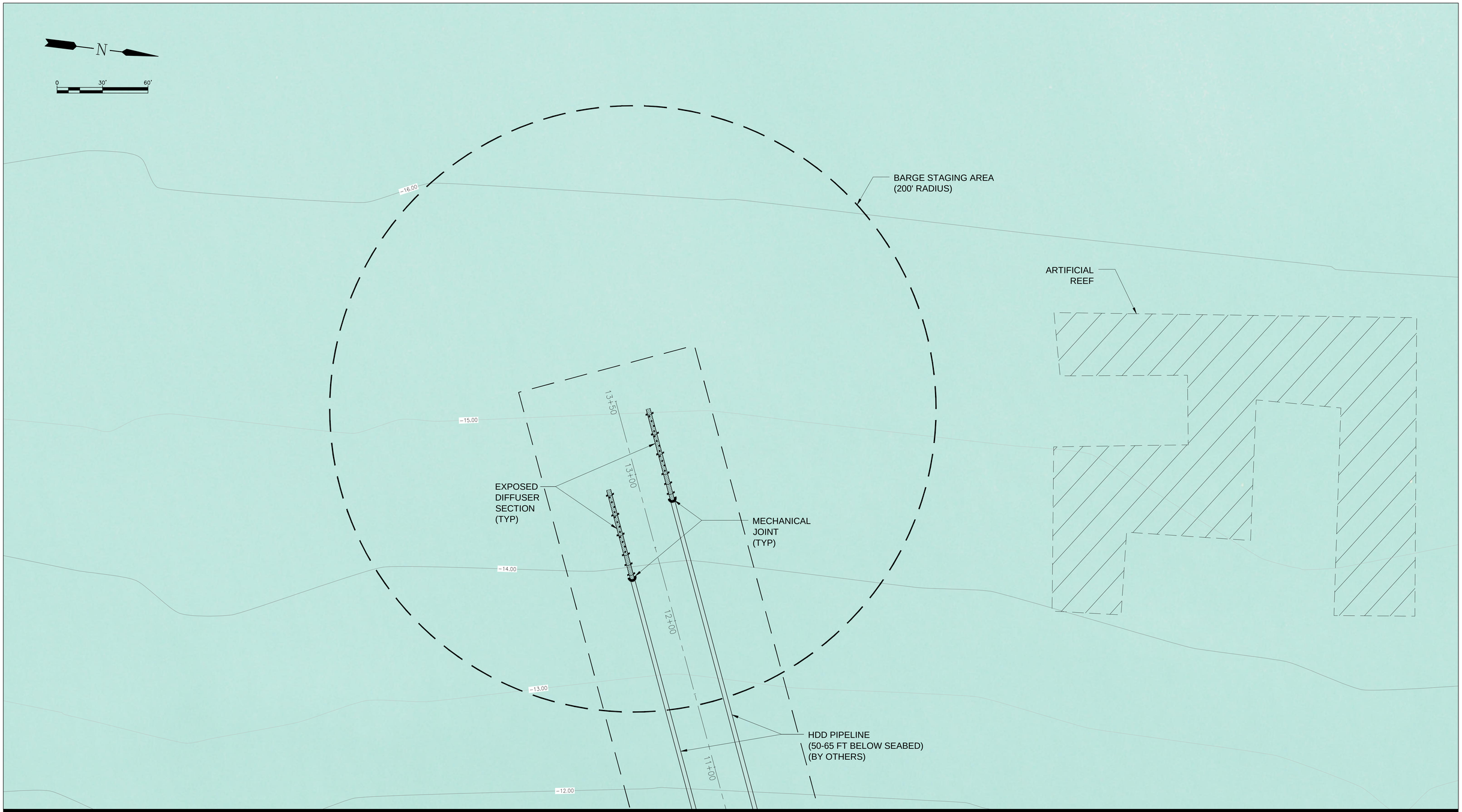

Z:\CADD_Graphics\US Projects\16-329_Naples Outfalls_Phase II\Design\90_100%_Plans\16-329_Naples Outfalls_60-90% Drawings_Const. Access & Staging.dwg Apr 15, 2022 - 8:27am

Revision	By	Appd.	YY.MM.DD

Issued	By	Appd.	YY.MM.DD
ISSUED 90% DESIGN DRAWINGS TO CITY (PRELIM REVIEW)	KME	APPROVED	22.04.15
ISSUED 75% DESIGN DRAWINGS TO CITY (PRELIM REVIEW)	KME	APPROVED	21.05.13

ECE
Erickson Consulting Engineers
7201 Delainey Court
Sarasota, FL 32420
www.ericksonconsultingengineers.com

Copyright Reserved
The Contractor shall verify and be responsible for all dimensions. DO NOT scale the drawing - any errors or omissions shall be reported to Erickson Consulting Engineers (ECE) without delay.
The Copyrights to all designs and drawings are the property of ECE. Reproduction or use for any purpose other than that authorized by ECE is forbidden.

Client/Project
CITY OF NAPLES
735 8th St S
NAPLES, FL.
Naples Beach Restoration & Water Quality Improvement Project

File Name:
16-329_Naples Outfalls_60-90% Drawings_Const. Access & Staging.dwg

Dwn.	Chkd.	Dsgn.	YY.MM.DD
JAW	SMT	KME	21.06.01

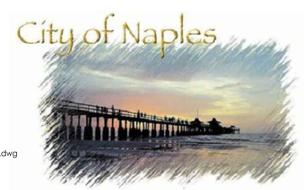

Title
CONSTRUCTION ACCESS
& STAGING PLAN
OFFSHORE DIFFUSER SYSTEM

Project No.	Scale	
20-380	AS NOTED	
Drawing No.	Sheet	Revision
AS	3	0

NOTES:

1. Critical Root Zone: Extends in all directions from trunk of tree to a distance equal to one foot per inch of trunk diameter at breast height.
2. Staging, storage, dumping, washing and operation of equipment is not permitted within the limits of the tree protection barrier, including during barrier installation.
3. Install all tree protection prior to commencement of construction and remove when directed by the Engineer. Maintain protection at all times.
4. For closely spaced groups of trees, place the tree protection barrier around the entire group.
5. Inspect trunk protection and tree quarterly to prevent girdling. Adjust bands to allow tree growth as needed.
6. See plans for any additional requirements or modifications within the tree protection area.
7. Place weather resistant sign every 50' along the barrier, with 6" minimum text height and provide text in English and Spanish. Sign should read " Keep Out Tree Protection Area".
8. Alternate tree protection systems approved by the Engineer may be used in lieu of the tree protection barrier detailed on this Index as long as the critical root zone is protected.
9. The Critical Root Zone may be reduced, in the field, by a certified Arborist or Landscape Architect.

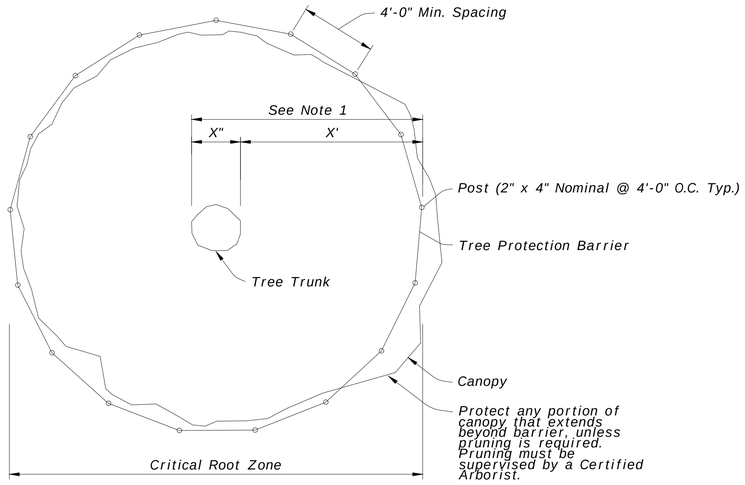

PLAN

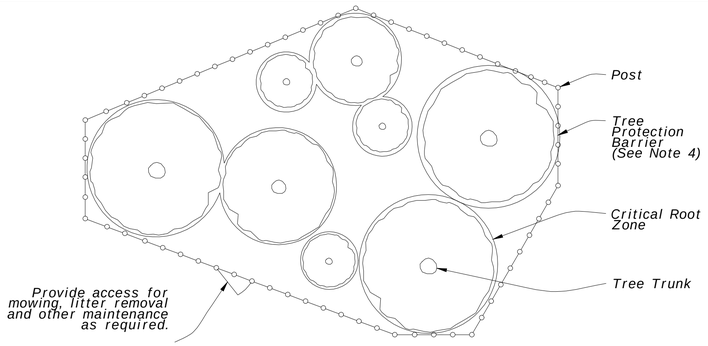

PLAN

PROTECTION BARRIER FOR TREE GROUPINGS

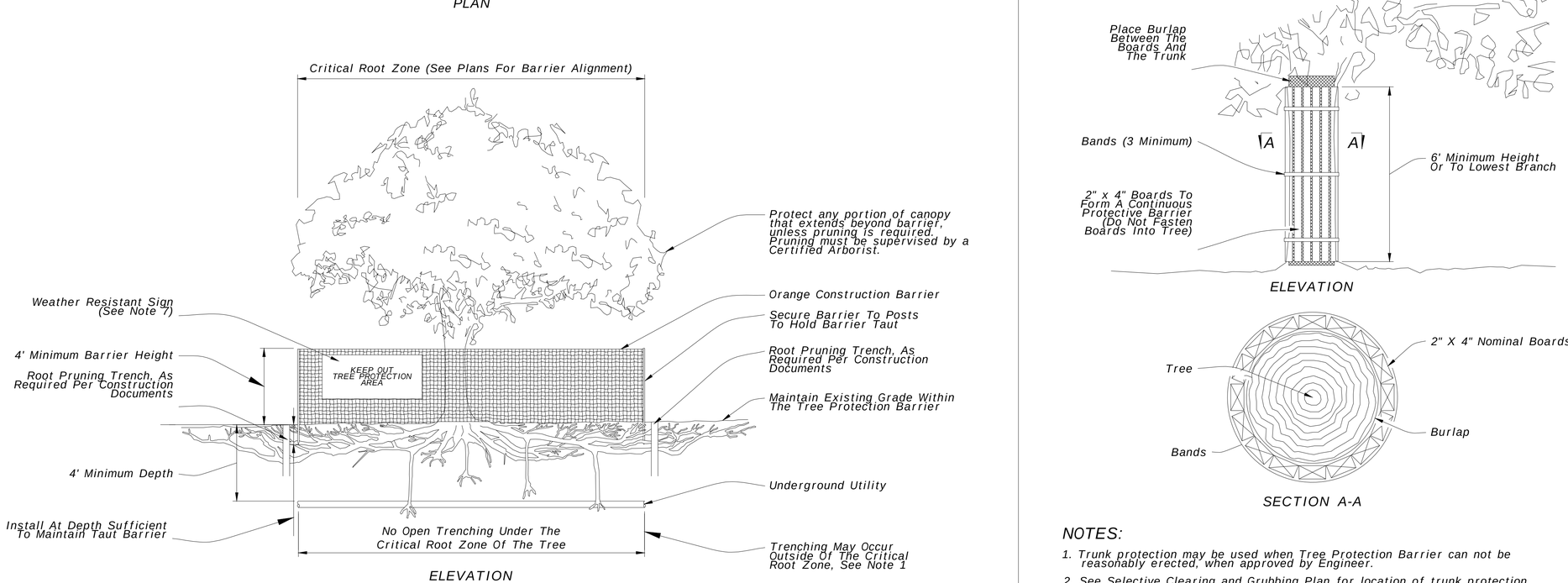

ELEVATION

TREE PROTECTION BARRIER

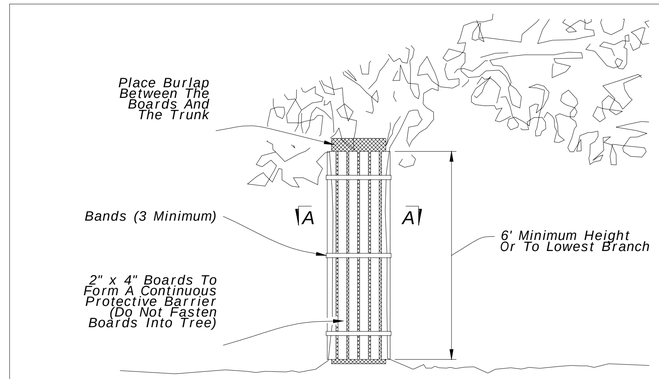

ELEVATION

SECTION A-A

NOTES:

1. Trunk protection may be used when Tree Protection Barrier can not be reasonably erected, when approved by Engineer.
2. See Selective Clearing and Grubbing Plan for location of trunk protection, when applicable.
3. Adjust bands to allow tree growth (inspect quarterly to prevent girdling).

TRUNK PROTECTION

Revision	By	Appd.	YY.MM.DD

Issued	By	Appd.	YY.MM.DD
ISSUED 90% DESIGN DRAWINGS TO CITY (PRELIM REVIEW)	KME	APPROVED	22.04.15
ISSUED 75% DESIGN DRAWINGS TO CITY (PRELIM REVIEW)	KME	APPROVED	21.05.13

ECE
Erickson Consulting Engineers
7201 Delainey Court
Sarasota, FL 32420
www.ericksonconsultingengineers.com

Copyright Reserved
The Contractor shall verify and be responsible for all dimensions. DO NOT scale the drawing - any errors or omissions shall be reported to Erickson Consulting Engineers (ECE) without delay. The Copyrights to all designs and drawings are the property of ECE. Reproduction or use for any purpose other than that authorized by ECE is forbidden.

Client/Project
CITY OF NAPLES
735 8th St S
NAPLES, FL.

Naples Beach Restoration & Water Quality Improvement Project

File Name:
16-329_Naples Outfalls_60-90% Drawings_Const. Access & Staging.dwg

JAW	SMT	KME	21.06.01
Dwn.	Chkd.	Dsgn.	YY.MM.DD

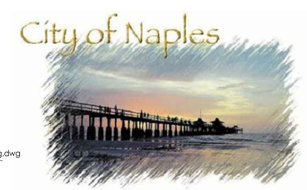

Title
CONSTRUCTION ACCESS & STAGING PLAN
TREE PROTECTION DETAILS

Project No.	Scale	
20-380	AS NOTED	
Drawing No.	Sheet	Revision
AS	4	0

Z:\CADD_Graphics\US_Projects\16-329_Naples_Outfalls_Phase_II\Design\90_100%_Plans\16-329_Naples_Outfalls_60-90%_Drawings_Const._Access_&_Staging.dwg Apr 15, 2022 - 8:27am

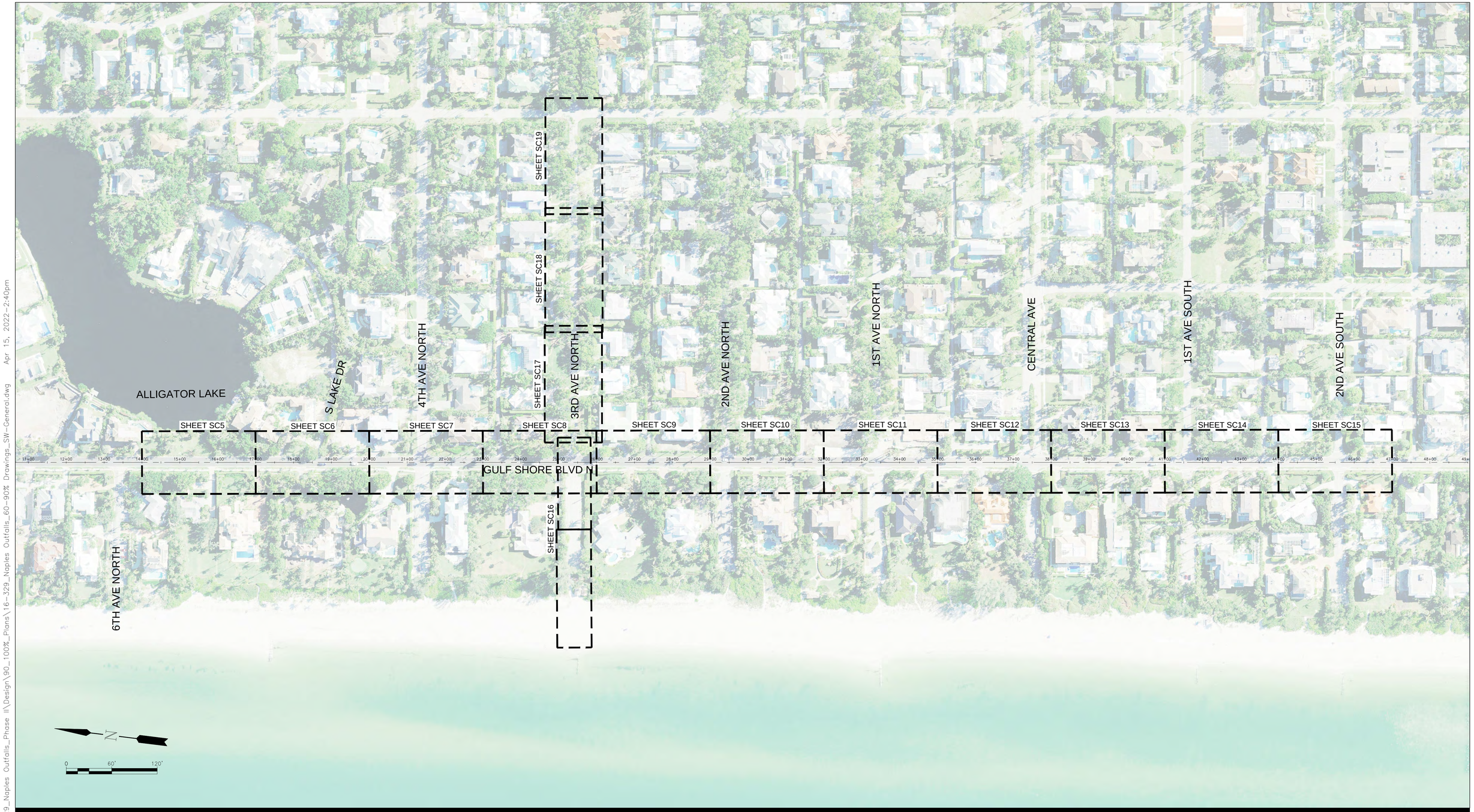

Revision	By	Appd.	YY.MM.DD

Issued	By	Appd.	YY.MM.DD
ISSUED 90% DESIGN DRAWINGS TO CITY (PRELIM REVIEW)	KME	APPROVED	22.04.15
ISSUED 75% DESIGN DRAWINGS TO CITY (PRELIM REVIEW)	KME	APPROVED	21.05.13

ECE
Erickson Consulting Engineers
7201 Delainey Court
Sarasota, FL 32420
www.ericksonconsultingengineers.com

Copyright Reserved
The Contractor shall verify and be responsible for all dimensions. DO NOT scale the drawing - any errors or omissions shall be reported to Erickson Consulting Engineers (ECE) without delay. The Copyrights to all designs and drawings are the property of ECE. Reproduction or use for any purpose other than that authorized by ECE is forbidden.

Client/Project
CITY OF NAPLES
735 8th St S
NAPLES, FL.

Naples Beach Restoration & Water Quality Improvement Project

File Name:
16-329_Naples Outfalls_60-90% Drawings_SW-General.dwg

JAW	SMT	KME	21.06.01
Dwn.	Chkd.	Dsgn.	YY.MM.DD

Title
STORMWATER CONSOLIDATION
KEY SHEET

Project No.	Scale	
16-329	AS NOTED	
Drawing No.	Sheet	Revision
SC	1	0

Z:\CADD_Graphics\US Projects\16-329_Naples Outfalls_Phase II\Design\90_100%_Plans\16-329_Naples Outfalls_60-90% Drawings_SW-General.dwg Apr 15, 2022-2:40pm

S-101
MES
INV: -1.15 (W)

S-21
CURB INLET, TYPE 8
TOP ELEV: 4.18
INV: -0.95 (N)
INV: 1.40 (W)
INV: 0.30 (S)
INV: -1.00 (E)

67 LF OF 24" RCP

6-4A
WEIR STRUCTURE
TOP ELEV: 1.17
INV: -2.50 (S)

6-4B
WEIR STRUCTURE
TOP ELEV: 4.50
INV: -1.00 (S)

153 LF OF 48" HDPE

S-23
CURB INLET, TYPE 8
TOP ELEV: 4.18
INV: 0.80 (S)
INV: 1.50 (W)
INV: 0.75 (N)

215 LF OF 23"x14" ERCP

GULF SHORE BLVD. N

14+00 15+00 16+00 17+

31 LF OF 15" RCP

31 LF OF 15" RCP

S-22
CURB INLET, TYPE 8
TOP ELEV: 4.18
INV: 1.60 (E)

S-24
CURB INLET, TYPE 8
TOP ELEV: 4.18
INV: 1.60 (E)

MATCHLINE STA. 17+00.00

N

0 10' 20'

Z:\CADD_Graphics\US Projects\16-329_Naples Outfalls_Phase II\Design\90_100%_Plans\16-329_Naples Outfalls_90-100% Drawings_SW-Plan.dwg Apr 15, 2022-2:29pm

Revision	By	Appd.	YY.MM.DD

Issued	By	Appd.	YY.MM.DD
ISSUED 90% DESIGN DRAWINGS TO CITY (PRELIM REVIEW)	KME	APPROVED	22.04.15
ISSUED 75% DESIGN DRAWINGS TO CITY (PRELIM REVIEW)	KME	APPROVED	21.05.13

ECE
Erickson Consulting Engineers
7201 Delainey Court
Sarasota, FL 32420
www.ericksonconsultingengineers.com

Copyright Reserved
The Contractor shall verify and be responsible for all dimensions. DO NOT scale the drawing - any errors or omissions shall be reported to Erickson Consulting Engineers (ECE) without delay.
The Copyrights to all designs and drawings are the property of ECE. Reproduction or use for any purpose other than that authorized by ECE is forbidden.

Client/Project
CITY OF NAPLES
735 8th St S
NAPLES, FL.
Naples Beach Restoration & Water Quality Improvement Project

File Name: 16-329_Naples Outfalls_90-100% Drawings_SW-Plan.dwg

JAW	SMT	KME	21.06.01
Dwn.	Chkd.	Dsgn.	YY.MM.DD

Title
STORMWATER CONSOLIDATION
PLAN VIEW
STA. 14+00 - 17+00

Project No.	Scale	
16-329	AS NOTED	
Drawing No.	Sheet	Revision
SC	2	0

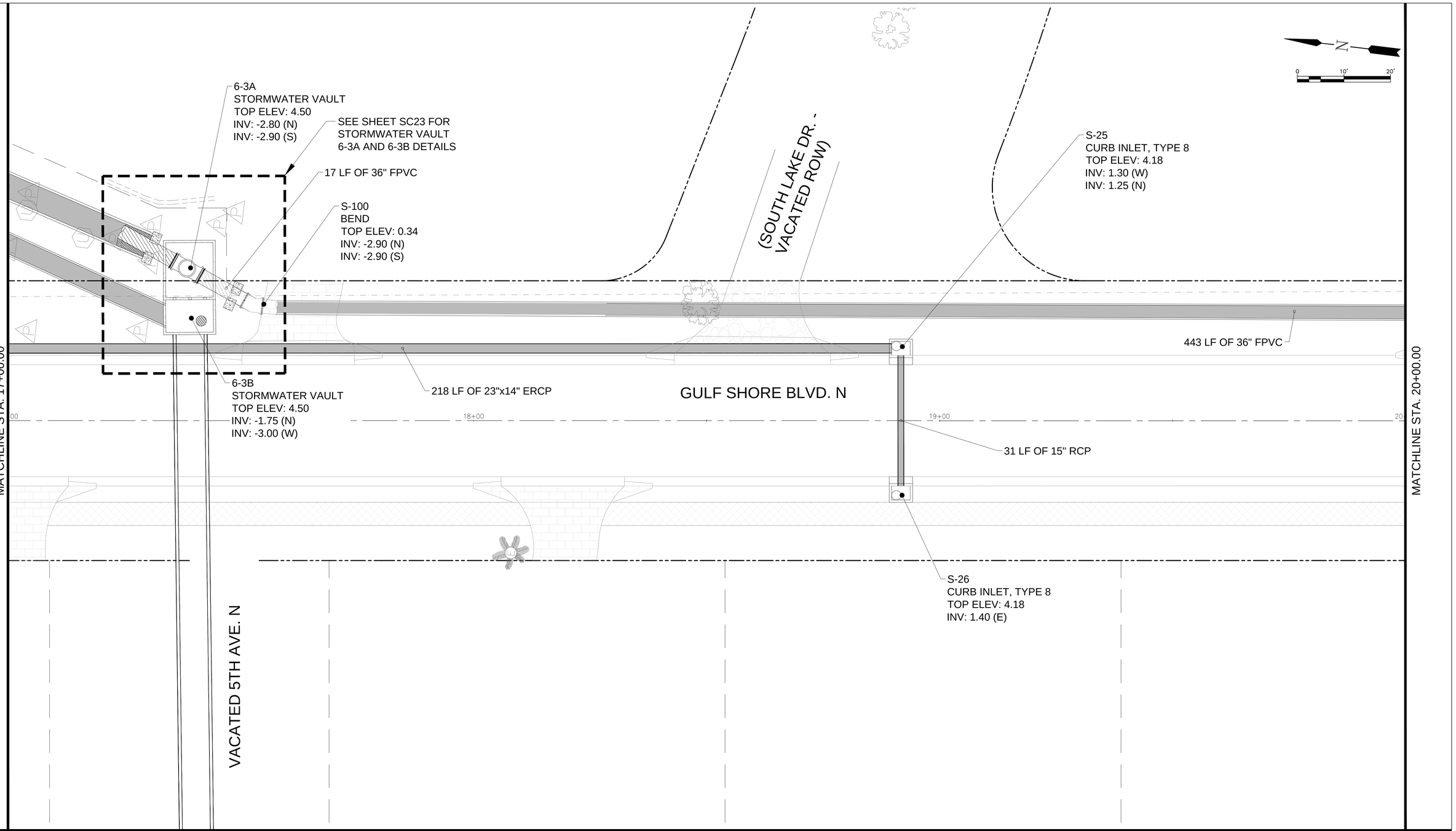

Revision	By	Appd.	YY.MM.DD

Issued	By	Appd.	YY.MM.DD
ISSUED 90% DESIGN DRAWINGS TO CITY (PRELIM REVIEW)	KME	APPROVED	22.04.15
ISSUED 75% DESIGN DRAWINGS TO CITY (PRELIM REVIEW)	KME	APPROVED	21.06.13

ECE
Erickson Consulting Engineers
7201 Delainey Court
Sarasota, FL 32420
www.ericksonconsultingengineers.com

Copyright Reserved
The Contractor shall verify and be responsible for all dimensions.
DO NOT scale the drawing - any errors or omissions shall be reported to Erickson Consulting Engineers (ECE) without delay.
The Copyrights to all designs and drawings are the property of ECE.
Reproduction or use for any purpose other than that authorized by ECE is forbidden.

Client/Project
CITY OF NAPLES
735 8th St S
NAPLES, FL.
Naples Beach Restoration & Water Quality Improvement Project

File Name:
16-329_Naples Outfalls_90-100% Drawings_SW-Plan.dwg

JAW	SMT	KME	21.06.01
Dwn.	Chkd.	Dsgn.	YY.MM.DD

Title
STORMWATER CONSOLIDATION
PLAN VIEW
STA. 17+00 - 20+00

Project No.	Scale	
16-329	AS NOTED	
Drawing No.	Sheet	Revision
SC	3	0

Z:\CADD_Graphics\US Projects\16-329_Naples Outfalls_Phase II\Design\90_100%_Plans\16-329_Naples Outfalls_90-100% Drawings_SW-Plan.dwg Apr 15, 2022 - 2:29pm

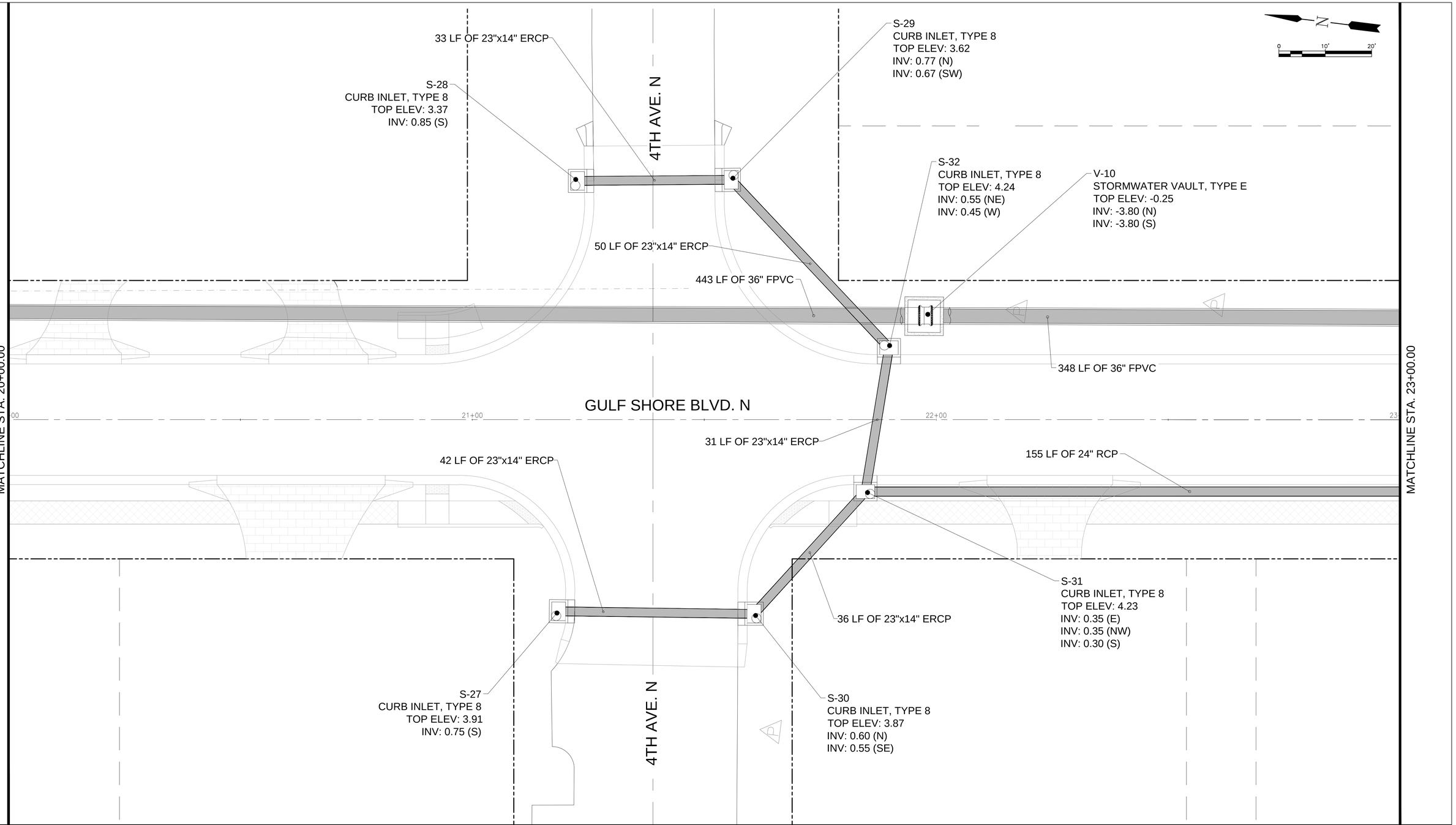

Revision	By	Appd.	YY.MM.DD

Issued	By	Appd.	YY.MM.DD
ISSUED 90% DESIGN DRAWINGS TO CITY (PRELIM REVIEW)	KME	APPROVED	22.04.15
ISSUED 75% DESIGN DRAWINGS TO CITY (PRELIM REVIEW)	KME	APPROVED	21.05.13

ECE
Erickson Consulting Engineers
7201 Delainey Court
Sarasota, FL 32420
www.ericksonconsultingengineers.com

Copyright Reserved
The Contractor shall verify and be responsible for all dimensions. DO NOT scale the drawing - any errors or omissions shall be reported to Erickson Consulting Engineers (ECE) without delay.
The Copyrights to all designs and drawings are the property of ECE. Reproduction or use for any purpose other than that authorized by ECE is forbidden.

Client/Project
CITY OF NAPLES
735 8th St S
NAPLES, FL.
Naples Beach Restoration & Water Quality Improvement Project

File Name: 16-329_Naples Outfalls_90-100% Drawings_SW-Plan.dwg

JAW	SMT	KME	21.06.01
Dwn.	Chkd.	Dsgn.	YY.MM.DD

Title
STORMWATER CONSOLIDATION
PLAN VIEW
STA. 20+00 - 23+00

Project No.	Scale	
16-329	AS NOTED	
Drawing No.	Sheet	Revision
SC	4	0

Z:\CADD_Graphics\US Projects\16-329_Naples Outfalls_Phase II\Design\90_100%_Plans\16-329_Naples Outfalls_90-100% Drawings_SW-Plan.dwg Apr 15, 2022 - 2:29pm

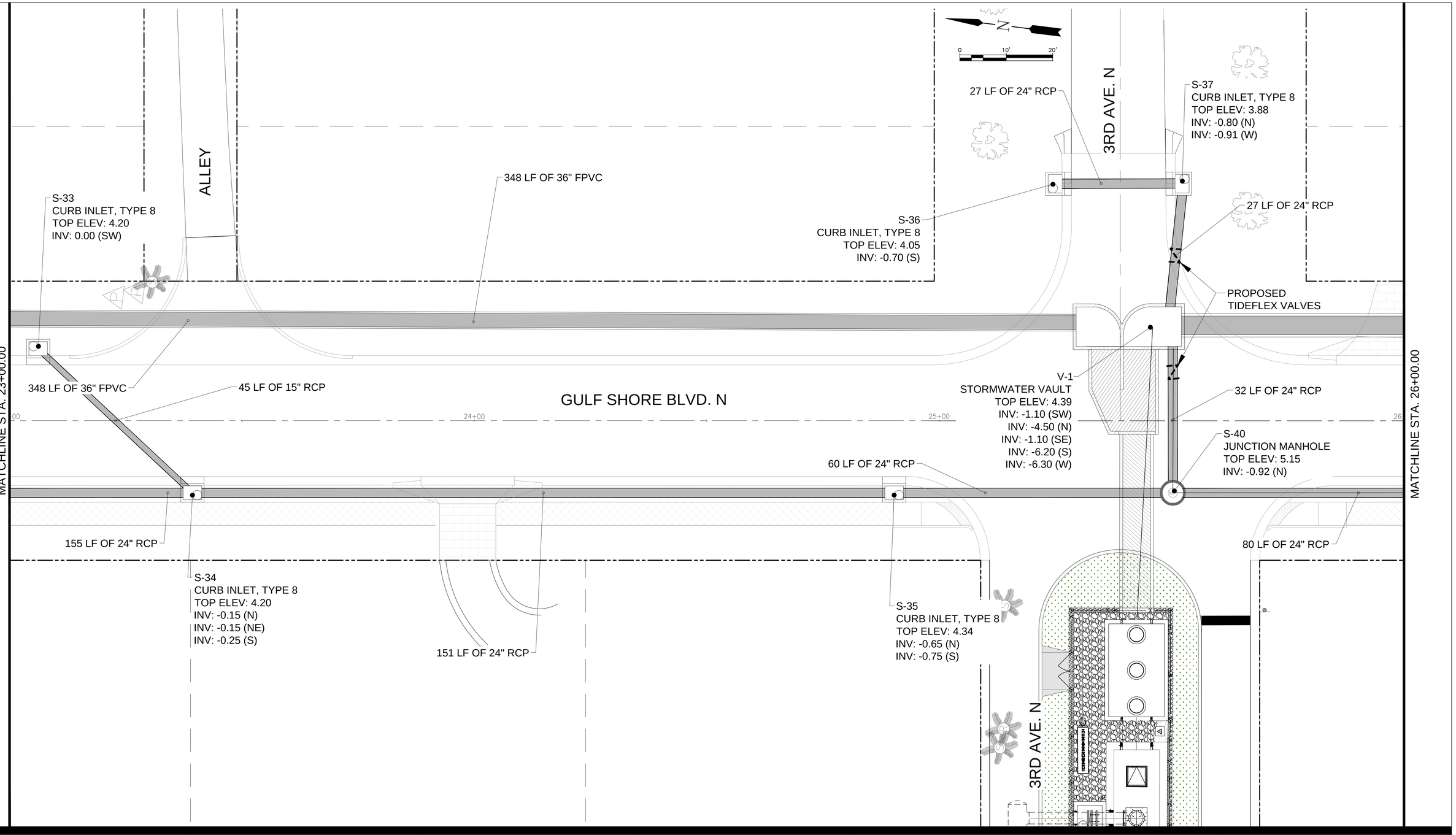

Z:\CADD_Graphics\US Projects\16-329_Naples Outfalls_Phase II\Design\90_100%_Plans\16-329_Naples Outfalls_90-100% Drawings_SW-Plan.dwg Apr 15, 2022-2:29pm

Revision	By	Appd.	YY.MM.DD

Issued	By	Appd.	YY.MM.DD
ISSUED 90% DESIGN DRAWINGS TO CITY (PRELIM REVIEW)	KME	APPROVED	22.04.15
ISSUED 75% DESIGN DRAWINGS TO CITY (PRELIM REVIEW)	KME	APPROVED	21.05.13

ECE
Erickson Consulting Engineers
7201 Delainey Court
Sarasota, FL 32420
www.ericksonconsultingengineers.com

Copyright Reserved
The Contractor shall verify and be responsible for all dimensions. DO NOT scale the drawing - any errors or omissions shall be reported to Erickson Consulting Engineers (ECE) without delay. The Copyrights to all designs and drawings are the property of ECE. Reproduction or use for any purpose other than that authorized by ECE is forbidden.

Client/Project
CITY OF NAPLES
735 8th St S
NAPLES, FL.
Naples Beach Restoration & Water Quality Improvement Project

File Name: 16-329_Naples Outfalls_90-100% Drawings_SW-Plan.dwg

JAW	SMT	KME	21.06.01
Dwn.	Chkd.	Dsgn.	YY.MM.DD

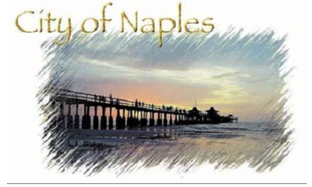

Title
STORMWATER CONSOLIDATION
PLAN VIEW
STA. 23+00 - 26+00

Project No.	Scale	
16-329	AS NOTED	
Drawing No.	Sheet	Revision
SC	5	0

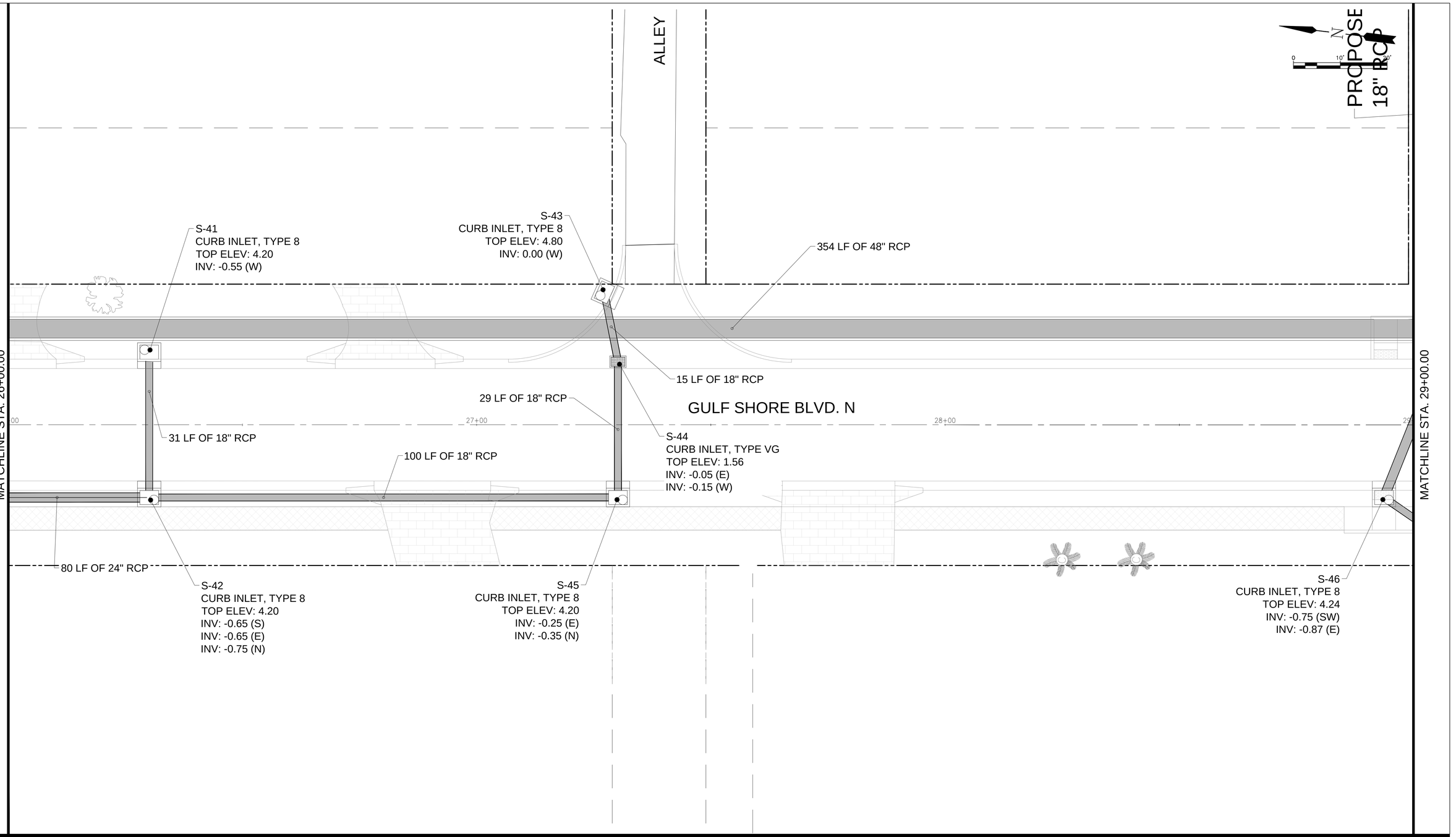

Revision	By	Appd.	YY.MM.DD

Issued	By	Appd.	YY.MM.DD
ISSUED 90% DESIGN DRAWINGS TO CITY (PRELIM REVIEW)	KME	APPROVED	22.04.15
ISSUED 75% DESIGN DRAWINGS TO CITY (PRELIM REVIEW)	KME	APPROVED	21.05.13

ECE
Erickson Consulting Engineers
7201 Delainey Court
Sarasota, FL 32420
www.ericksonconsultingengineers.com

Copyright Reserved
The Contractor shall verify and be responsible for all dimensions.
DO NOT scale the drawing - any errors or omissions shall be reported
to Erickson Consulting Engineers (ECE) without delay.
The Copyrights to all designs and drawings are the property of ECE.
Reproduction or use for any purpose other than that authorized by ECE is forbidden.

Client/Project
CITY OF NAPLES
735 8th St S
NAPLES, FL.
Naples Beach Restoration & Water Quality Improvement Project

File Name:
16-329_Naples Outfalls_90-100% Drawings_SW-Plan.dwg

JAW	SMT	KME	21.06.01
Dwn.	Chkd.	Dsgn.	YY.MM.DD

Title
STORMWATER CONSOLIDATION
PLAN VIEW
STA. 26+00 - 29+00

Project No.	Scale	
16-329	AS NOTED	
Drawing No.	Sheet	Revision
SC	6	0

Z:\CADD_Graphics\US Projects\16-329_Naples Outfalls_Phase II\Design\90_100%_Plans\16-329_Naples Outfalls_90-100% Drawings_SW-Plan.dwg Apr 15, 2022 - 2:29pm

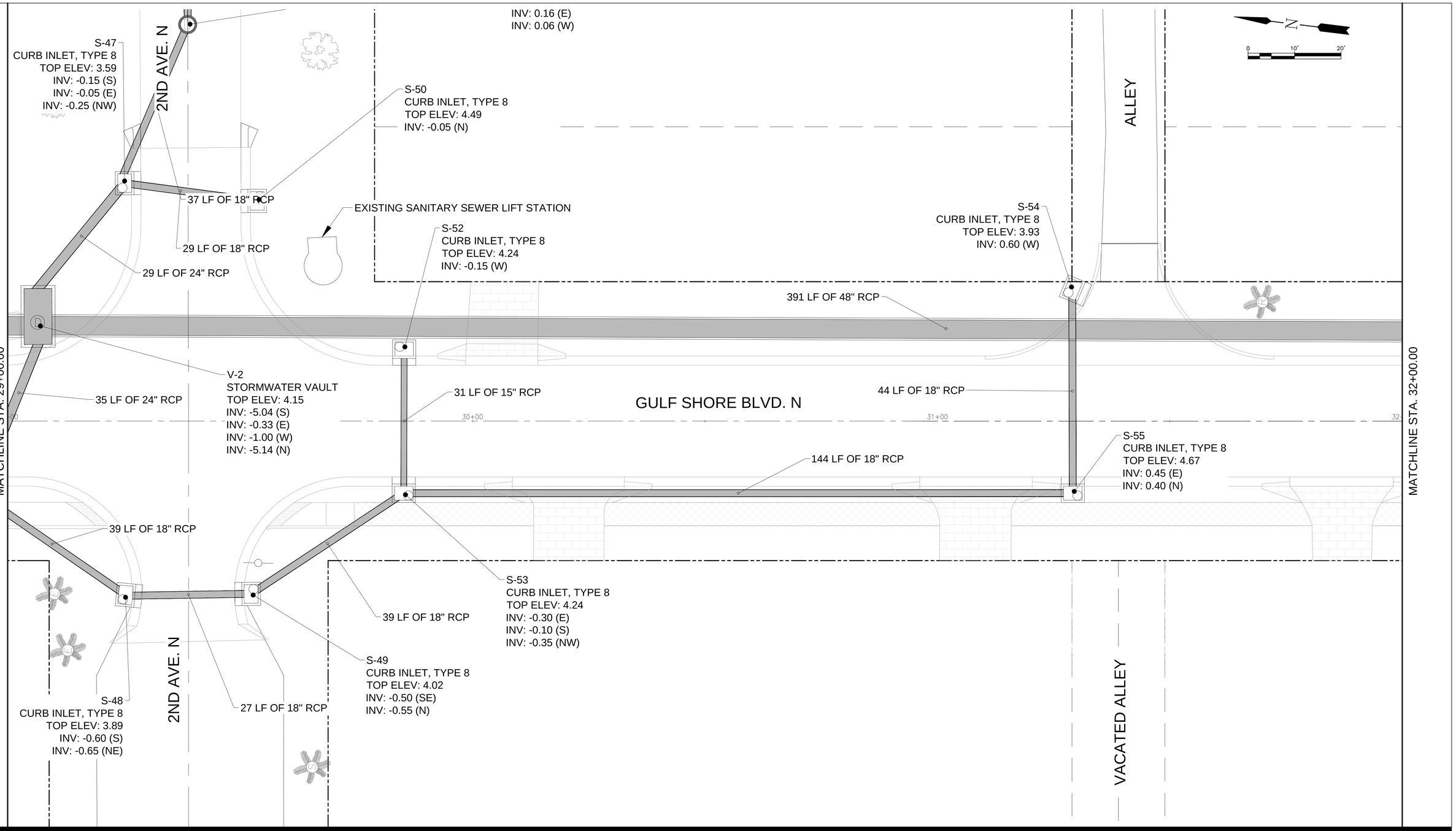

Revision	By	Appd.	YY.MM.DD

Issued	By	Appd.	YY.MM.DD
ISSUED 90% DESIGN DRAWINGS TO CITY (PRELIM REVIEW)	KME	APPROVED	22.04.15
ISSUED 75% DESIGN DRAWINGS TO CITY (PRELIM REVIEW)	KME	APPROVED	21.05.13

ECE
Erickson Consulting Engineers
7201 Delainey Court
Sarasota, FL 32420
www.ericksonconsultingengineers.com

Copyright Reserved
The Contractor shall verify and be responsible for all dimensions. DO NOT scale the drawing - any errors or omissions shall be reported to Erickson Consulting Engineers (ECE) without delay.
The Copyrights to all designs and drawings are the property of ECE. Reproduction or use for any purpose other than that authorized by ECE is forbidden.

Client/Project
CITY OF NAPLES
735 8th St S
NAPLES, FL.
Naples Beach Restoration & Water Quality Improvement Project

File Name: 16-329_Naples Outfalls_90-100% Drawings_SW-Plan.dwg

JAW	SMT	KME	21.06.01
Dwn.	Chkd.	Dsgn.	YY.MM.DD

Title
STORMWATER CONSOLIDATION
PLAN VIEW
STA. 29+00 - 32+00

Project No.	Scale	
16-329	AS NOTED	
Drawing No.	Sheet	Revision
SC	7	0

Z:\CADD_Graphics\US Projects\16-329_Naples Outfalls_Phase II\Design\90_100%_Plans\16-329_Naples Outfalls_90-100% Drawings_SW-Plan.dwg Apr 15, 2022 - 2:29pm

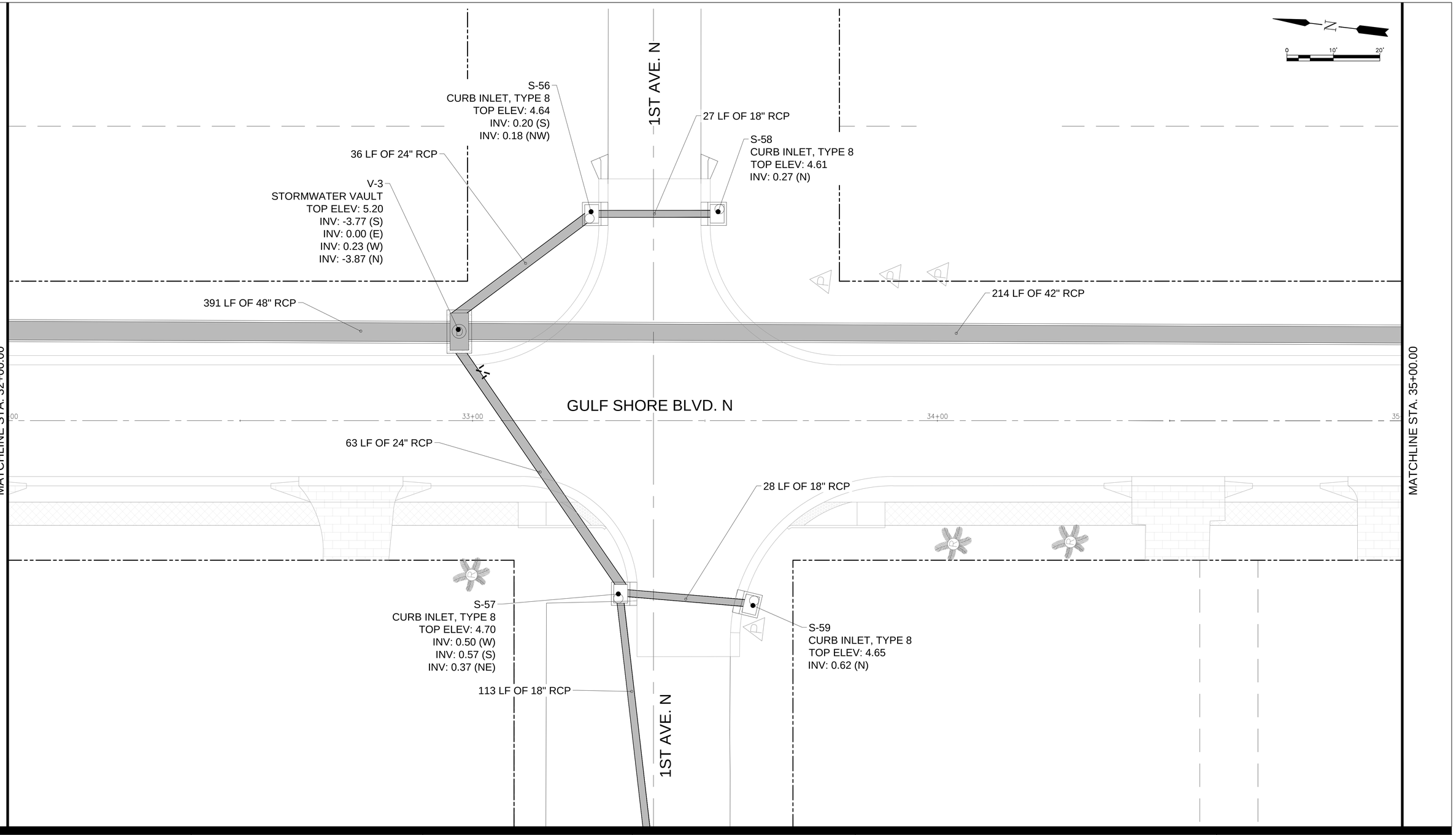

Z:\CADD_Graphics\US Projects\16-329_Naples Outfalls_Phase II\Design\90_100%_Plans\16-329_Naples Outfalls_90-100% Drawings_SW-Plan.dwg Apr 15, 2022 - 2:30pm

Revision	By	Appd.	YY.MM.DD

Issued	By	Appd.	YY.MM.DD
ISSUED 90% DESIGN DRAWINGS TO CITY (PRELIM REVIEW)	KME	APPROVED	22.04.15
ISSUED 75% DESIGN DRAWINGS TO CITY (PRELIM REVIEW)	KME	APPROVED	21.05.13

ECE
Erickson Consulting Engineers
7201 Delainey Court
Sarasota, FL 32420
www.ericksonconsultingengineers.com

Copyright Reserved
The Contractor shall verify and be responsible for all dimensions.
DO NOT scale the drawing - any errors or omissions shall be reported to Erickson Consulting Engineers (ECE) without delay.
The Copyrights to all designs and drawings are the property of ECE.
Reproduction or use for any purpose other than that authorized by ECE is forbidden.

Client/Project
CITY OF NAPLES
735 8th St S
NAPLES, FL.
Naples Beach Restoration & Water Quality Improvement Project

File Name: 16-329_Naples Outfalls_90-100% Drawings_SW-Plan.dwg

JAW	SMT	KME	21.06.01
Dwn.	Chkd.	Dsgn.	YY.MM.DD

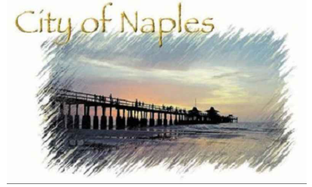

Title
STORMWATER CONSOLIDATION
PLAN VIEW
STA. 32+00 - 35+00

Project No.	Scale	
16-329	AS NOTED	
Drawing No.	Sheet	Revision
SC	8	0

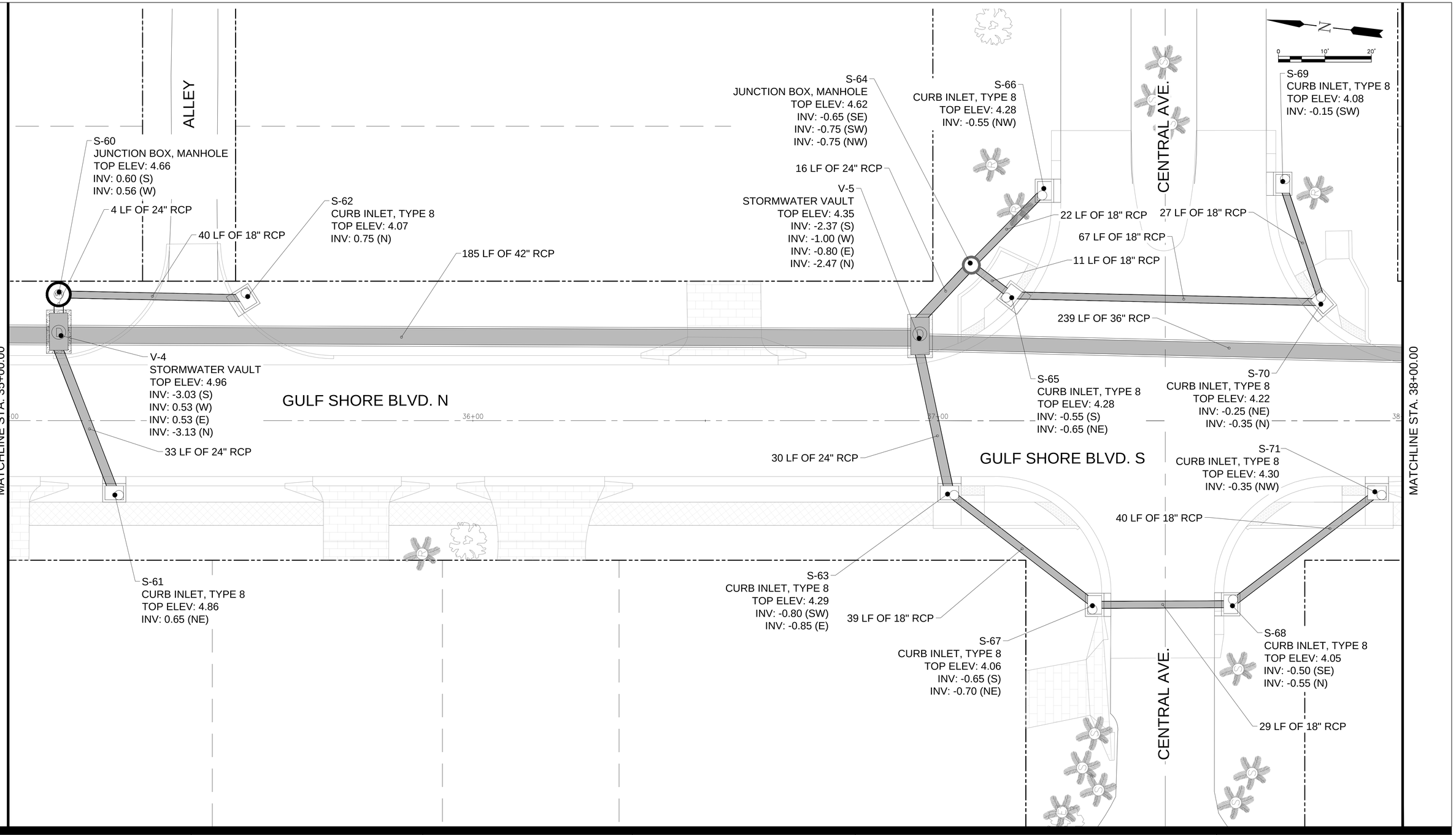

Revision	By	Appd.	YY.MM.DD

Issued	By	Appd.	YY.MM.DD
ISSUED 90% DESIGN DRAWINGS TO CITY (PRELIM REVIEW)	KME	APPROVED	22.04.15
ISSUED 75% DESIGN DRAWINGS TO CITY (PRELIM REVIEW)	KME	APPROVED	21.05.13

ECE
Erickson Consulting Engineers
7201 Delainey Court
Sarasota, FL 32420
www.ericksonconsultingengineers.com

Copyright Reserved
The Contractor shall verify and be responsible for all dimensions. DO NOT scale the drawing - any errors or omissions shall be reported to Erickson Consulting Engineers (ECE) without delay. The Copyrights to all designs and drawings are the property of ECE. Reproduction or use for any purpose other than that authorized by ECE is forbidden.

Client/Project
CITY OF NAPLES
735 8th St S
NAPLES, FL.
Naples Beach Restoration & Water Quality Improvement Project

File Name: 16-329_Naples Outfalls_90-100% Drawings_SW-Plan.dwg

JAW	SMT	KME	21.06.01
Dwn.	Chkd.	Dsgn.	YY.MM.DD

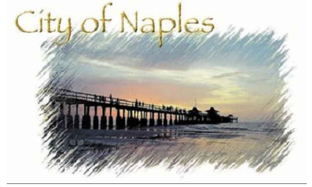

Title
STORMWATER CONSOLIDATION
PLAN VIEW
STA. 35+00 - 38+00

Project No.	Scale	
16-329	AS NOTED	
Drawing No.	Sheet	Revision
SC	9	0

Z:\CADD_Graphics\US Projects\16-329_Naples Outfalls_Phase II\Design\90_100%_Plans\16-329_Naples Outfalls_90-100% Drawings_SW-Plan.dwg Apr 15, 2022 - 2:30pm

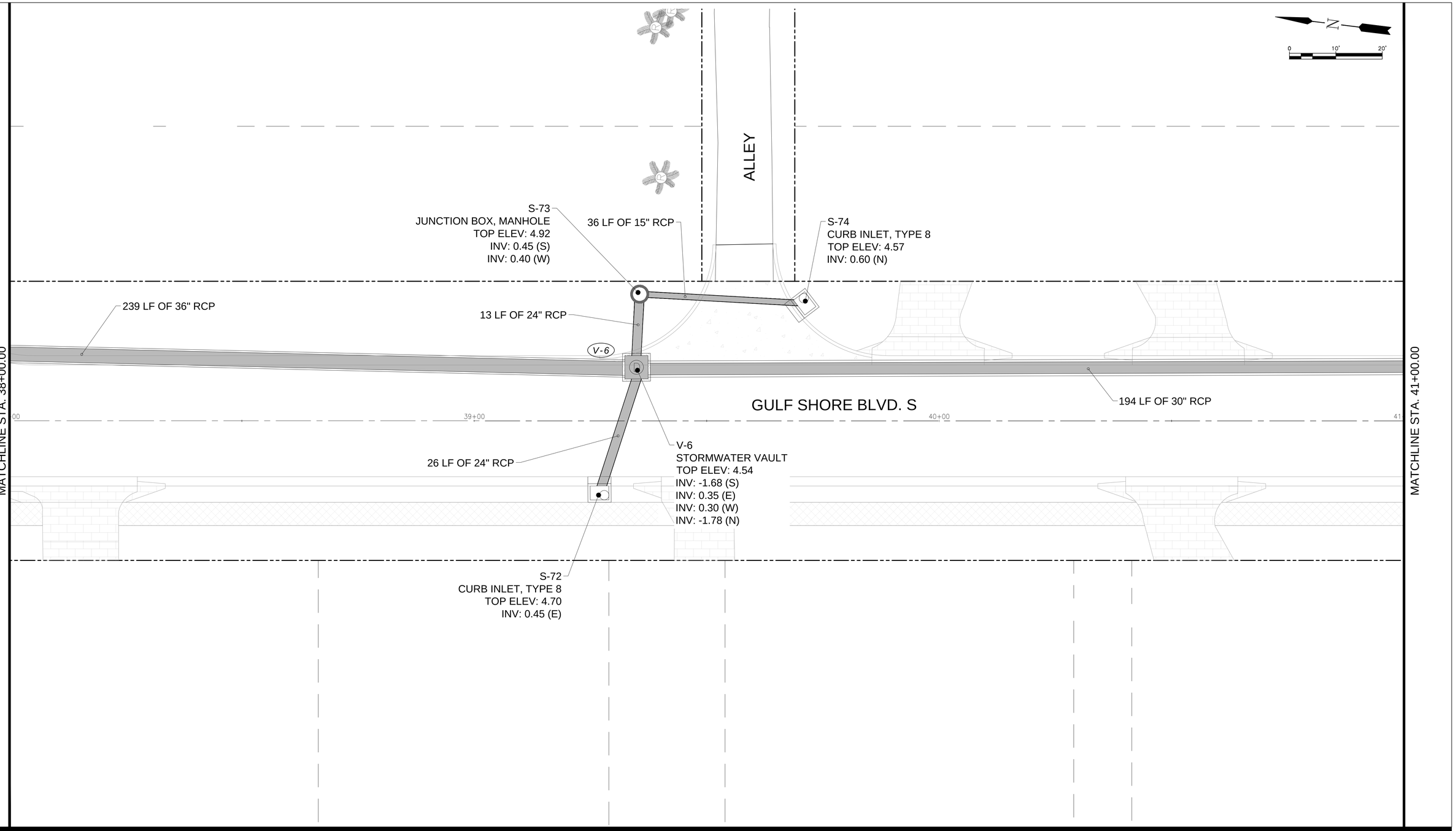

Revision	By	Appd.	YY.MM.DD

Issued	By	Appd.	YY.MM.DD
ISSUED 90% DESIGN DRAWINGS TO CITY (PRELIM REVIEW)	KME	APPROVED	22.04.15
ISSUED 75% DESIGN DRAWINGS TO CITY (PRELIM REVIEW)	KME	APPROVED	21.05.13

ECE
Erickson Consulting Engineers
7201 Delainey Court
Sarasota, FL 32420
www.ericksonconsultingengineers.com

Copyright Reserved
The Contractor shall verify and be responsible for all dimensions.
DO NOT scale the drawing - any errors or omissions shall be reported
to Erickson Consulting Engineers (ECE) without delay.
The Copyrights to all designs and drawings are the property of ECE.
Reproduction or use for any purpose other than that authorized by ECE is forbidden.

Client/Project
CITY OF NAPLES
735 8th St S
NAPLES, FL.

Naples Beach Restoration
& Water Quality
Improvement Project

File Name:
16-329_Naples Outfalls_90-100% Drawings_SW-Plan.dwg

JAW	SMT	KME	21.06.01
Dwn.	Chkd.	Dsgn.	YY.MM.DD

Title
STORMWATER CONSOLIDATION
PLAN VIEW
STA. 38+00 - 41+00

Project No.	Scale	
16-329	AS NOTED	
Drawing No.	Sheet	Revision
SC	10	0

Z:\CADD_Graphics\US Projects\16-329_Naples Outfalls_Phase II\Design\90_100%_Plans\16-329_Naples Outfalls_90-100% Drawings_SW-Plan.dwg Apr 15, 2022 - 2:30pm

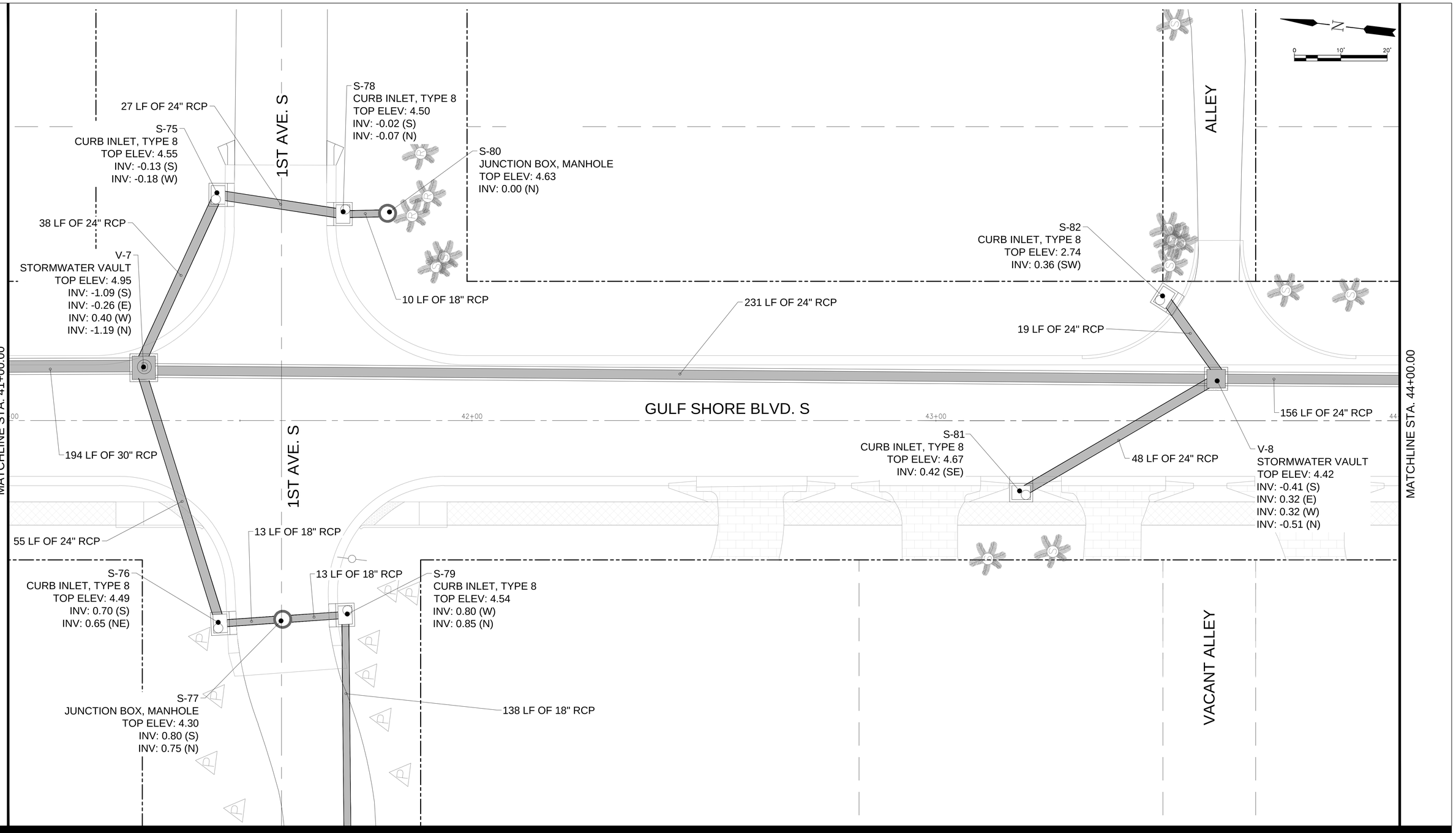

Z:\CADD_Graphics\US Projects\16-329_Naples Outfalls_Phase II\Design\90_100%_Plans\16-329_Naples Outfalls_90-100% Drawings_SW-Plan.dwg Apr 15, 2022 - 2:30pm

Revision	By	Appd.	YY.MM.DD

Issued	By	Appd.	YY.MM.DD
ISSUED 90% DESIGN DRAWINGS TO CITY (PRELIM REVIEW)	KME	APPROVED	22.04.15
ISSUED 75% DESIGN DRAWINGS TO CITY (PRELIM REVIEW)	KME	APPROVED	21.05.13

ECE
Erickson Consulting Engineers
7201 Delaney Court
Sarasota, FL 32420
www.ericksonconsultingengineers.com

Copyright Reserved
The Contractor shall verify and be responsible for all dimensions. DO NOT scale the drawing - any errors or omissions shall be reported to Erickson Consulting Engineers (ECE) without delay. The Copyrights to all designs and drawings are the property of ECE. Reproduction or use for any purpose other than that authorized by ECE is forbidden.

Client/Project
CITY OF NAPLES
735 8th St S
NAPLES, FL.
Naples Beach Restoration & Water Quality Improvement Project

File Name: 16-329_Naples Outfalls_90-100% Drawings_SW-Plan.dwg

JAW	SMT	KME	21.06.01
Dwn.	Chkd.	Dsgn.	YY.MM.DD

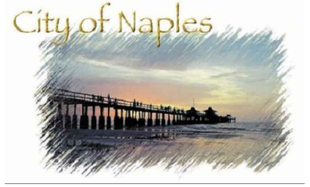

Title
STORMWATER CONSOLIDATION
PLAN VIEW
STA. 41+00 - 44+00

Project No.	Scale	
16-329	AS NOTED	
Drawing No.	Sheet	Revision
SC	11	0

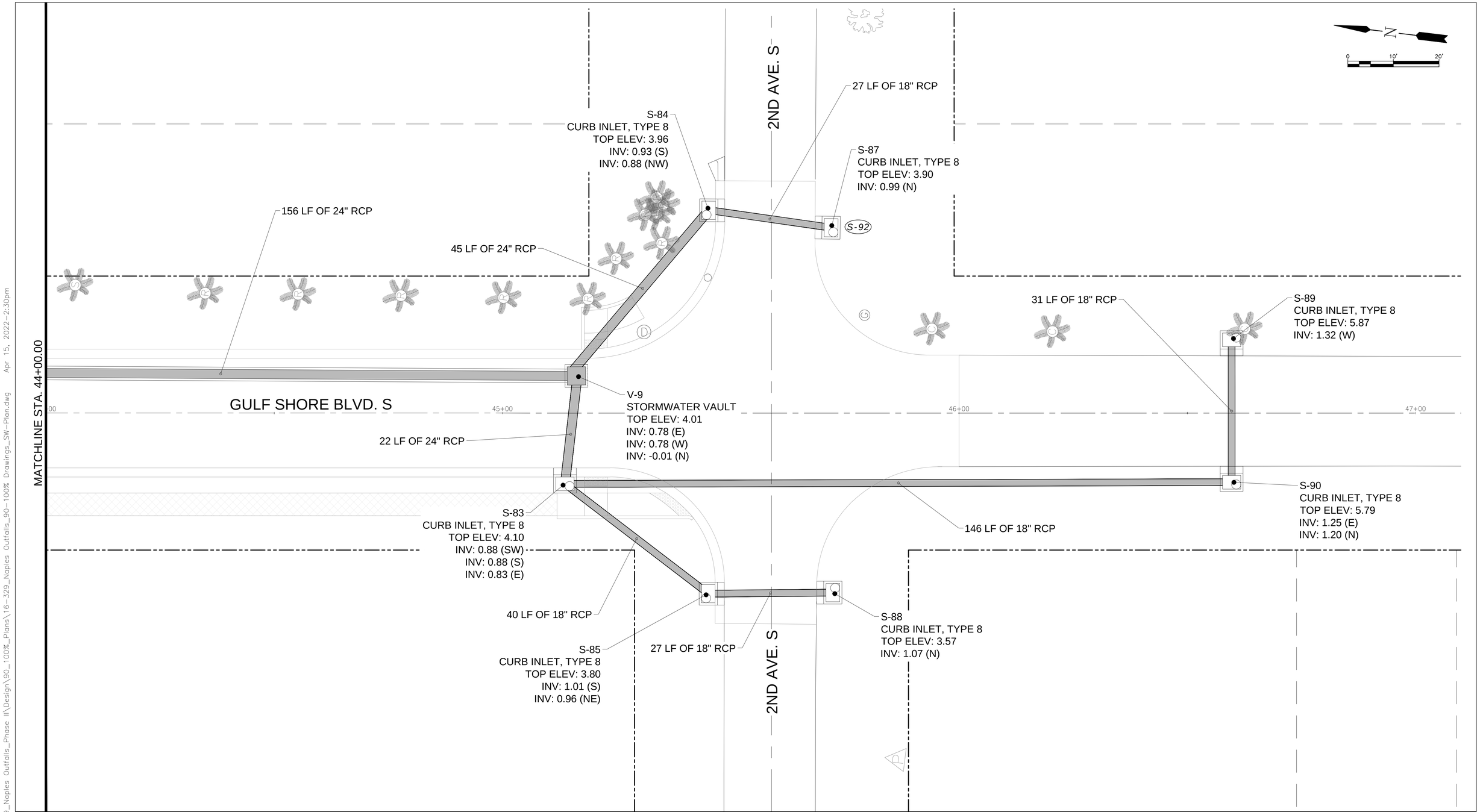

Z:\CADD_Graphics\US Projects\16-329_Naples Outfalls_Phase II\Design\90_100%_Plans\16-329_Naples Outfalls_90-100% Drawings_SW-Plan.dwg Apr 15, 2022 - 2:30pm

Revision	By	Appd.	YY.MM.DD

Issued	By	Appd.	YY.MM.DD
ISSUED 90% DESIGN DRAWINGS TO CITY (PRELIM REVIEW)	KME	APPROVED	22.04.15
ISSUED 75% DESIGN DRAWINGS TO CITY (PRELIM REVIEW)	KME	APPROVED	21.05.13

ECE
Erickson Consulting Engineers
7201 Delainey Court
Sarasota, FL 32420
www.ericksonconsultingengineers.com

Copyright Reserved
The Contractor shall verify and be responsible for all dimensions. DO NOT scale the drawing - any errors or omissions shall be reported to Erickson Consulting Engineers (ECE) without delay.
The Copyrights to all designs and drawings are the property of ECE. Reproduction or use for any purpose other than that authorized by ECE is forbidden.

Client/Project
CITY OF NAPLES
735 8th St S
NAPLES, FL.
Naples Beach Restoration & Water Quality Improvement Project

File Name: 16-329_Naples Outfalls_90-100% Drawings_SW-Plan.dwg

JAW	SMT	KME	21.06.01
Dwn.	Chkd.	Dsgn.	YY.MM.DD

Title
STORMWATER CONSOLIDATION
PLAN VIEW
STA. 44+00 - 46+00

Project No.	Scale	
16-329	AS NOTED	
Drawing No.	Sheet	Revision
SC	12	0

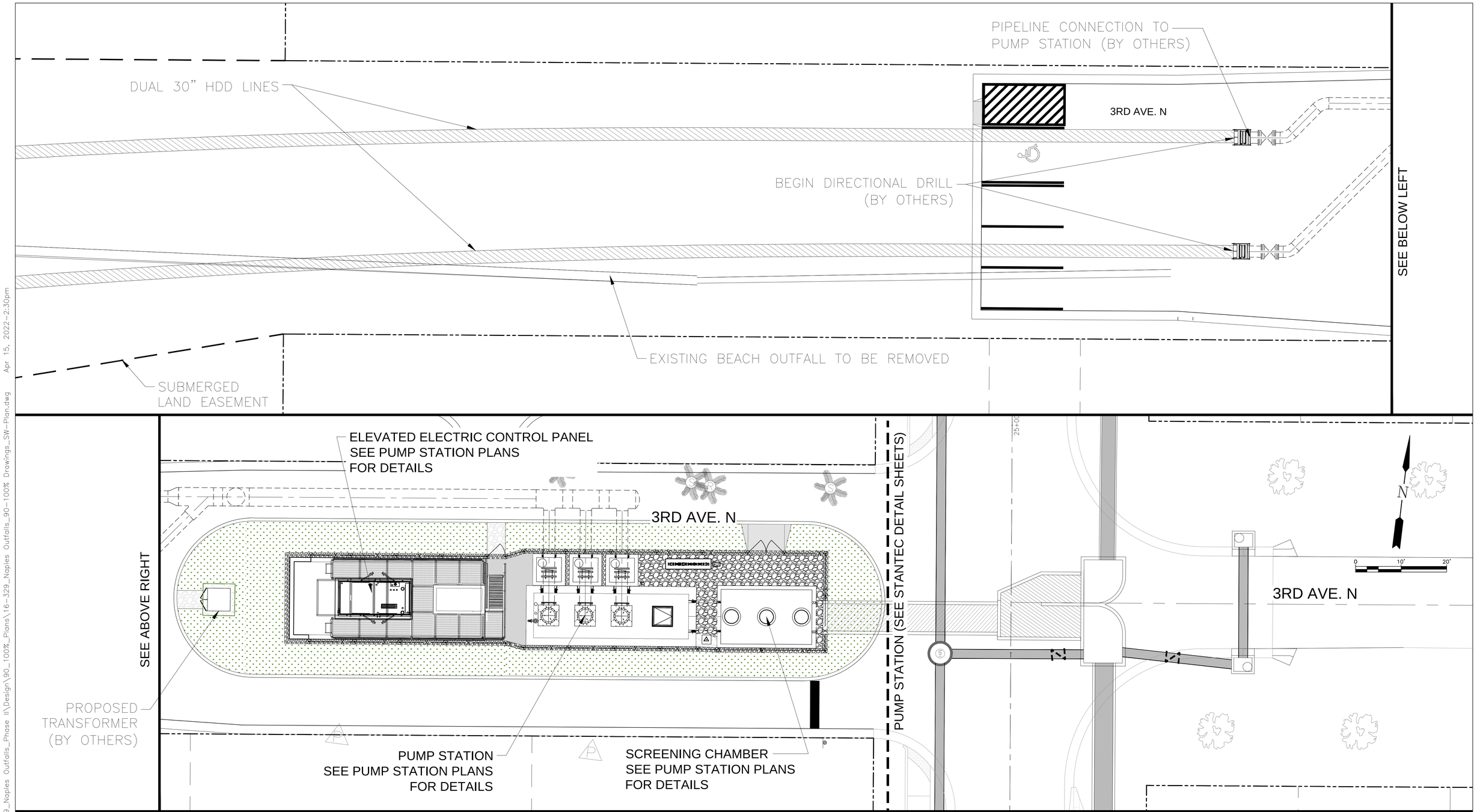

Revision	By	Appd.	YY.MM.DD

Issued	By	Appd.	YY.MM.DD
ISSUED 90% DESIGN DRAWINGS TO CITY (PRELIM REVIEW)	KME	APPROVED	22.04.15
ISSUED 75% DESIGN DRAWINGS TO CITY (PRELIM REVIEW)	KME	APPROVED	21.05.13

Stantec

ECE
Erickson Consulting Engineers
7201 Delainey Court
Sarasota, FL 32420
www.ericksonconsultingengineers.com

Copyright Reserved
The Contractor shall verify and be responsible for all dimensions. DO NOT scale the drawing - any errors or omissions shall be reported to Erickson Consulting Engineers (ECE) without delay. The Copyrights to all designs and drawings are the property of ECE. Reproduction or use for any purpose other than that authorized by ECE is forbidden.

Client/Project
CITY OF NAPLES
735 8th St S
NAPLES, FL.
Naples Beach Restoration & Water Quality Improvement Project

File Name: 16-329_Naples Outfalls_90-100% Drawings_SW-Plan.dwg

Dwn.	Chkd.	Dsgn.	YY.MM.DD
JAW	SMT	KME	21.06.01

Title
STORM VAULT PLAN VIEW
3RD AVE. NORTH

Project No.	Scale	
16-329	AS NOTED	
Drawing No.	Sheet	Revision
SC	13	0

Z:\CADD_Graphics\US Projects\16-329_Naples Outfalls_Phase II\Design\90_100%_Plans\16-329_Naples Outfalls_90-100% Drawings_SW-Plan.dwg Apr 15, 2022 - 2:30pm

Z:\CADD_Graphics\US Projects\16-329_Naples Outfalls_Phase II\Design\90_100%_Plans\16-329_Naples Outfalls_90-100% Drawings_SW-Plan.dwg Apr 15, 2022 - 2:30pm

Revision	By	Appd.	YY.MM.DD

Issued	By	Appd.	YY.MM.DD
ISSUED 90% DESIGN DRAWINGS TO CITY (PRELIM REVIEW)	KME	APPROVED	22.04.15
ISSUED 75% DESIGN DRAWINGS TO CITY (PRELIM REVIEW)	KME	APPROVED	21.05.13

ECE
Erickson Consulting Engineers
7201 Delainey Court
Sarasota, FL 32420
www.ericksonconsultingengineers.com

Copyright Reserved
The Contractor shall verify and be responsible for all dimensions. DO NOT scale the drawing - any errors or omissions shall be reported to Erickson Consulting Engineers (ECE) without delay.
The Copyrights to all designs and drawings are the property of ECE. Reproduction or use for any purpose other than that authorized by ECE is forbidden.

Client/Project
CITY OF NAPLES
735 8th St S
NAPLES, FL.
Naples Beach Restoration & Water Quality Improvement Project

File Name:
16-329_Naples Outfalls_90-100% Drawings_SW-Plan.dwg

JAW	SMT	KME	21.06.01
Dwn.	Chkd.	Dsgn.	YY.MM.DD

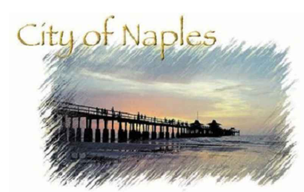

Title
PRETREATMENT PLANS
PLAN VIEWS
3RD AVE. N, 2ND AVE. N & 1ST AVE. S

Project No.	Scale	
	AS NOTED	
Drawing No.	Sheet	Revision
SC	14	0

VAULT 6-3
TOP ELEV. = 6.0'
BOTTOM OF VAULT = -3.45'
NE INV -2.81' 48" RCP
S INV -2.81' 36" FPVC
(SEE SHEET # SC-32 FOR
PINCH VALVE DETAIL)

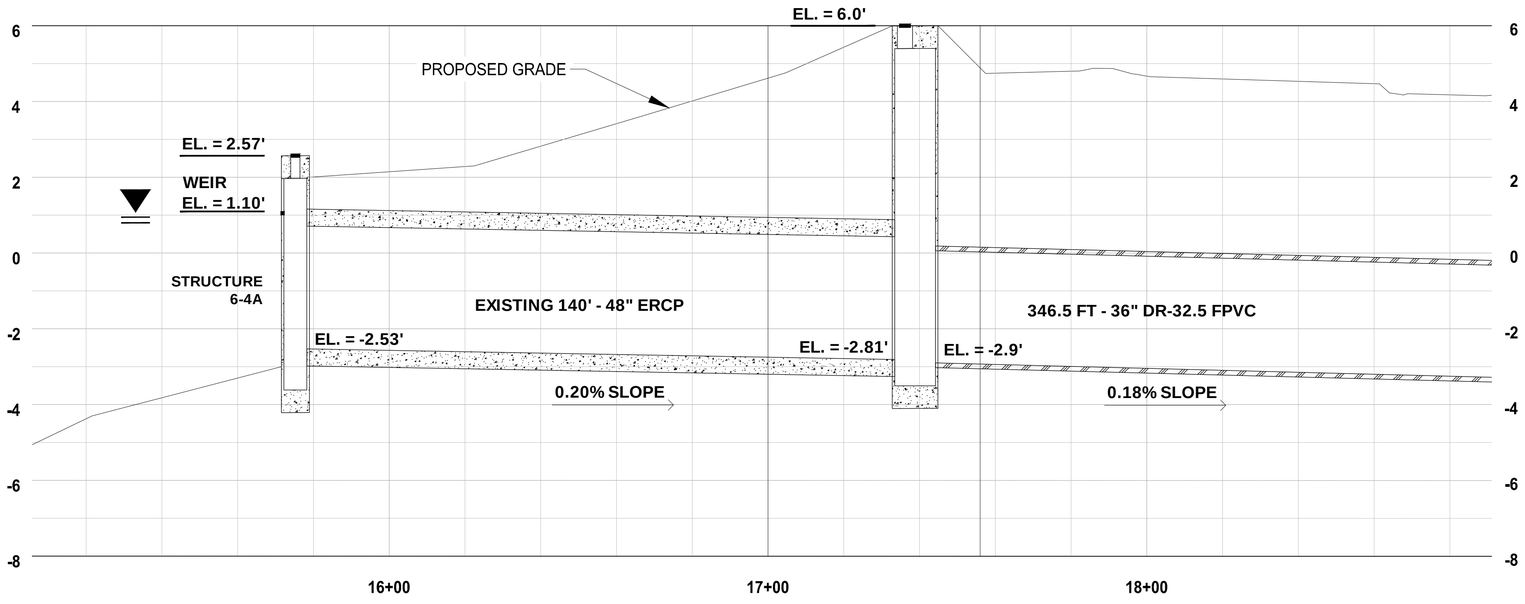

DISTANCE (FT)

GULFSHORE BLVD

SCALE: 1"=20' (H)
1"=2' (V)

Revision	By	Appd.	YY.MM.DD

Issued	By	Appd.	YY.MM.DD
ISSUED 90% DESIGN DRAWINGS TO CITY (PRELIM REVIEW)	KME	APPROVED	22.04.15
ISSUED 75% DESIGN DRAWINGS TO CITY (PRELIM REVIEW)	KME	APPROVED	21.05.13

ECE
Erickson Consulting Engineers
7201 Delainey Court
Sarasota, FL 32420
www.ericksonconsultingengineers.com

Copyright Reserved
The Contractor shall verify and be responsible for all dimensions.
DO NOT scale the drawing - any errors or omissions shall be reported
to Erickson Consulting Engineers (ECE) without delay.
The Copyrights to all designs and drawings are the property of ECE.
Reproduction or use for any purpose other than that authorized by ECE is forbidden.

Client/Project
CITY OF NAPLES
735 8th St S
NAPLES, FL.
Naples Beach Restoration
& Water Quality
Improvement Project

File Name:
16-329_Naples Outfalls_60-90% Drawings_SW-Profile.dwg

JAW	SMT	KME	21.06.01
Dwn.	Chkd.	Dsgn.	YY.MM.DD

Title
PROFILE VIEW
STA. 13+00 - 18+50

Project No.	Scale	
16-329	AS NOTED	
Drawing No.	Sheet	Revision
SC	15	0

Z:\CADD_Graphics\US Projects\16-329_Naples Outfalls_Phase II\Design\90_100%_Plans\16-329_Naples Outfalls_60-90% Drawings_SW-Profile.dwg Apr 15, 2022 - 2:33pm

VAULT 6-2A
MANHOLE TOP ELEV. = 4.3'
TOP OF VAULT = 3.3'
BOTTOM OF VAULT = -6.2'
N INV -3.7' 36" FPVC
S INV -3.8' 36" FPVC

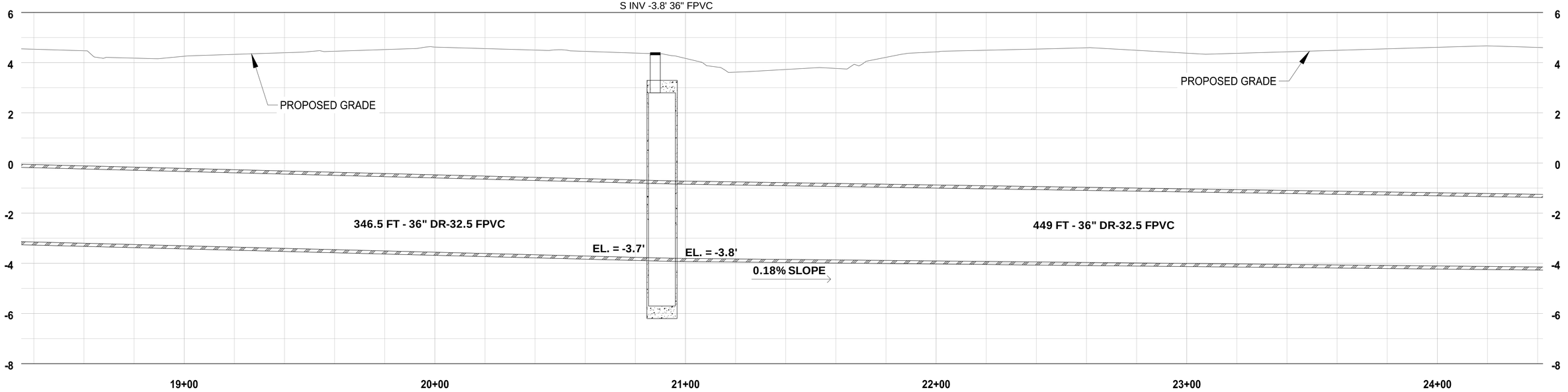

DISTANCE (FT)

GULFSHORE BLVD

SCALE: 1"=20' (H)
1"=2' (V)

Revision	By	Appd.	YY.MM.DD

Issued	By	Appd.	YY.MM.DD
ISSUED 90% DESIGN DRAWINGS TO CITY (PRELIM REVIEW)	KME	APPROVED	22.04.15
ISSUED 75% DESIGN DRAWINGS TO CITY (PRELIM REVIEW)	KME	APPROVED	21.05.13

Erickson Consulting Engineers
7201 Delainey Court
Sarasota, FL 32420
www.ericksonconsultingengineers.com

Copyright Reserved
The Contractor shall verify and be responsible for all dimensions.
DO NOT scale the drawing - any errors or omissions shall be reported
to Erickson Consulting Engineers (ECE) without delay.
The Copyrights to all designs and drawings are the property of ECE.
Reproduction or use for any purpose other than that authorized by ECE is forbidden.

Client/Project
CITY OF NAPLES
735 8th St S
NAPLES, FL.
Naples Beach Restoration & Water Quality Improvement Project

File Name: 16-329_Naples Outfalls_60-90% Drawings_SW-Profile.dwg

JAW	SMT	KME	21.06.01
Dwn.	Chkd.	Dsgn.	YY.MM.DD

Title
PROFILE VIEW
STA. 18+50 - 24+00

Project No.	Scale	
16-329	AS NOTED	
Drawing No.	Sheet	Revision
SC	16	0

Z:\CADD_Graphics\US Projects\16-329_Naples Outfalls_Phase II\Design\90_100%_Plans\16-329_Naples Outfalls_60-90% Drawings_SW-Profile.dwg Apr 15, 2022-2:33pm

VAULT 1
MANHOLE TOP = 4.4'
TOP OF VAULT = 4.4'
N INV -4.5' 36" FPVC
E INV -0.78 24" RCP
S INV -6.1' 48" ADS-HP
SW INV -1.5 24" RCP
W INV -6.2' 4'x6' BOX CULVERT

VAULT 2
TYPE "J" BOX
MANHOLE TOP = 4.3'
TOP OF VAULT = 3.8'
N INV -5.2' 48" ADS OR RCP
SE INV -0.33' 24" RCP
S INV -5.1' 48" ADS OR RCP
W INV -1.0' 24" RCP

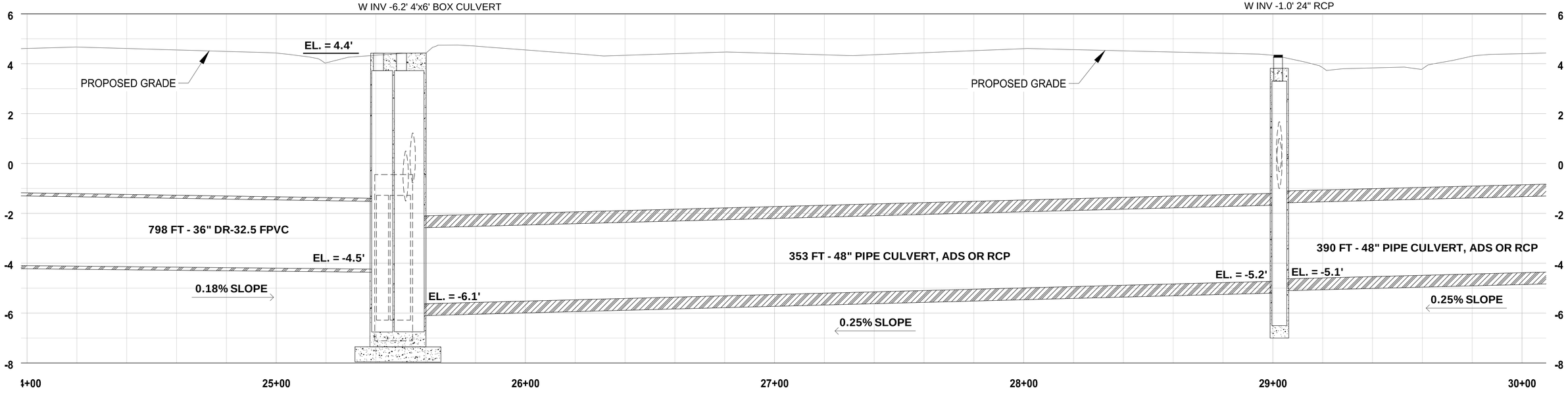

DISTANCE (FT)

GULFSHORE BLVD

SCALE: 1"=20' (H)
1"=2' (V)

Revision	By	Appd.	YY.MM.DD

Issued	By	Appd.	YY.MM.DD
ISSUED 90% DESIGN DRAWINGS TO CITY (PRELIM REVIEW)	KME	APPROVED	22.04.15
ISSUED 75% DESIGN DRAWINGS TO CITY (PRELIM REVIEW)	KME	APPROVED	21.05.13

ECE
Erickson Consulting Engineers
7201 Delainey Court
Sarasota, FL 32420
www.ericksonconsultingengineers.com

Copyright Reserved
The Contractor shall verify and be responsible for all dimensions.
DO NOT scale the drawing - any errors or omissions shall be reported
to Erickson Consulting Engineers (ECE) without delay.
The Copyrights to all designs and drawings are the property of ECE.
Reproduction or use for any purpose other than that authorized by ECE is forbidden.

Client/Project
CITY OF NAPLES
735 8th St S
NAPLES, FL.
Naples Beach Restoration & Water Quality Improvement Project

File Name:
16-329_Naples Outfalls_60-90% Drawings_SW-Profile.dwg

JAW	SMT	KME	21.06.01
Dwn.	Chkd.	Dsgn.	YY.MM.DD

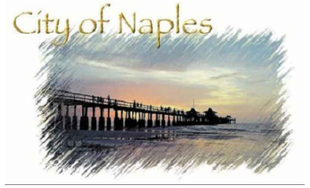

Title
PROFILE VIEW
STA. 24+00 - 30+00

Project No.	Scale	
16-329	AS NOTED	
Drawing No.	Sheet	Revision
SC	17	0

Z:\CADD_Graphics\US Projects\16-329_Naples Outfalls_Phase II\Design\90_100%_Plans\16-329_Naples Outfalls_60-90% Drawings_SW-Profile.dwg Apr 15, 2022-2:33pm

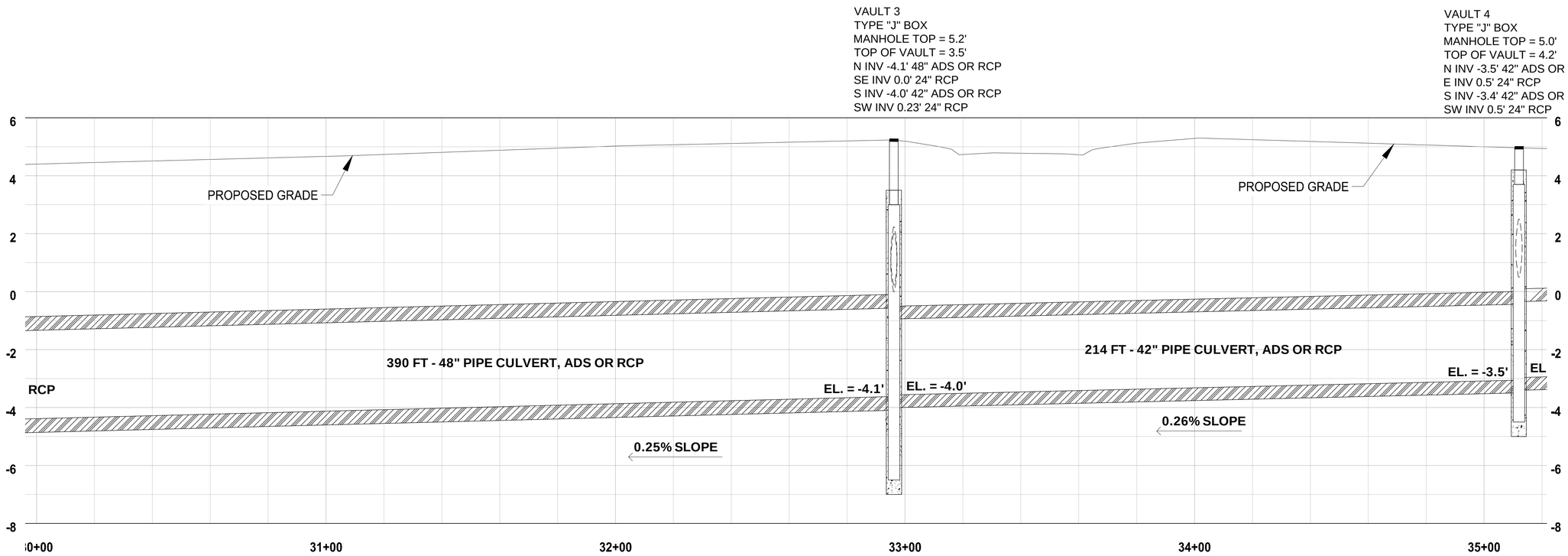

DISTANCE (FT)

GULFSHORE BLVD

SCALE: 1"=20' (H)
1"=2' (V)

Revision	By	Appd.	YY.MM.DD

Issued	By	Appd.	YY.MM.DD
ISSUED 90% DESIGN DRAWINGS TO CITY (PRELIM REVIEW)	KME	APPROVED	22.04.15
ISSUED 75% DESIGN DRAWINGS TO CITY (PRELIM REVIEW)	KME	APPROVED	21.05.13

Erickson Consulting Engineers
7201 Delainey Court
Sarasota, FL 32420
www.ericksonconsultingengineers.com

Copyright Reserved
The Contractor shall verify and be responsible for all dimensions.
DO NOT scale the drawing - any errors or omissions shall be reported
to Erickson Consulting Engineers (ECE) without delay.
The Copyrights to all designs and drawings are the property of ECE.
Reproduction or use for any purpose other than that authorized by ECE is forbidden.

Client/Project
CITY OF NAPLES
735 8th St S
NAPLES, FL.
Naples Beach Restoration & Water Quality Improvement Project

File Name:
16-329_Naples Outfalls_60-90% Drawings_SW-Profile.dwg

JAW	SMT	KME	21.06.01
Dwn.	Chkd.	Dsgn.	YY.MM.DD

Title
PROFILE VIEW
STA. 30+00 - 35+00

Project No.	Scale	
16-329	AS NOTED	
Drawing No.	Sheet	Revision
SC	18	0

Z:\CADD_Graphics\US Projects\16-329_Naples Outfalls_Phase II\Design\90_100%_Plans\16-329_Naples Outfalls_60-90% Drawings_SW-Profile.dwg Apr 15, 2022-2:33pm

VAULT 4
TYPE "J" BOX
MANHOLE TOP = 5.0'
TOP OF VAULT = 4.2'
N INV -3.5' 42" ADS OR RCP
E INV 0.5' 24" RCP
S INV -3.4' 42" ADS OR RCP
SW INV 0.5' 24" RCP

VAULT 5
TYPE "J" BOX
MANHOLE TOP = 4.4'
TOP OF VAULT = 3.7'
N INV -2.9 42" ADS OR RCP
SE INV -0.8 24" RCP
S INV -2.8' 36" ADS OR RCP
W INV -1.0' 24" RCP

VAULT 6
TYPE "J" BOX
MANHOLE TOP = 4.5'
TOP OF VAULT = 4.5'
N INV -2.3' 36" ADS OR RCP
E INV 0.35' 24" RCP
S INV -2.2' 30" ADS OR RCP
W INV 0.3' 24" RCP

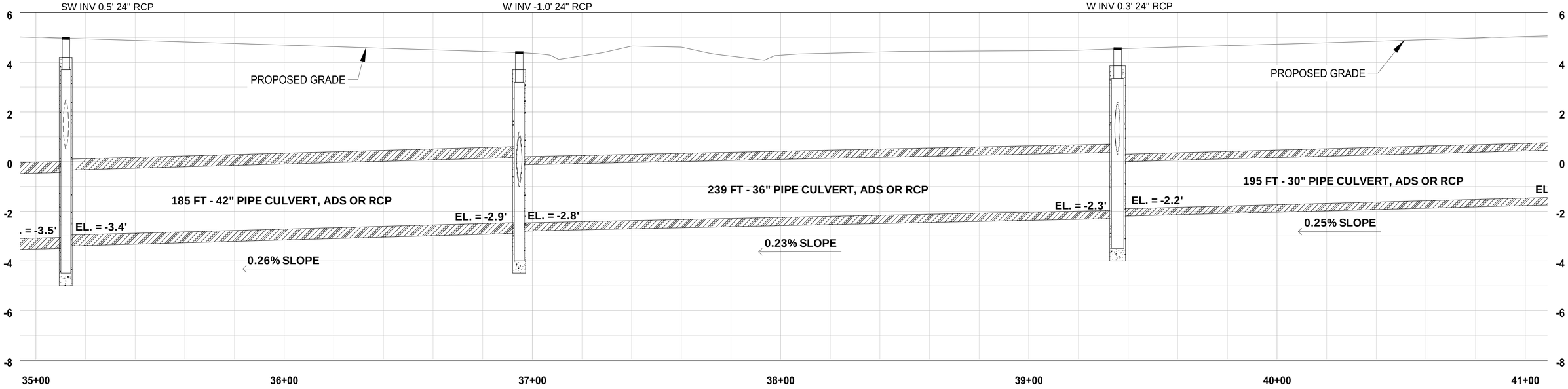

DISTANCE (FT)

GULFSHORE BLVD

SCALE: 1"=20' (H)
1"=2' (V)

Revision	By	Appd.	YY.MM.DD

Issued	By	Appd.	YY.MM.DD
ISSUED 90% DESIGN DRAWINGS TO CITY (PRELIM REVIEW)	KME	APPROVED	22.04.15
ISSUED 75% DESIGN DRAWINGS TO CITY (PRELIM REVIEW)	KME	APPROVED	21.05.13

ECE
Erickson Consulting Engineers
7201 Delainey Court
Sarasota, FL 32420
www.ericksonconsultingengineers.com

Copyright Reserved
The Contractor shall verify and be responsible for all dimensions.
DO NOT scale the drawing - any errors or omissions shall be reported to Erickson Consulting Engineers (ECE) without delay.
The Copyrights to all designs and drawings are the property of ECE.
Reproduction or use for any purpose other than that authorized by ECE is forbidden.

Client/Project
CITY OF NAPLES
735 8th St S
NAPLES, FL.
Naples Beach Restoration & Water Quality Improvement Project

File Name:
16-329_Naples Outfalls_60-90% Drawings_SW-Profile.dwg

JAW	SMT	KME	21.06.01
Dwn.	Chkd.	Dsgn.	YY.MM.DD

Title
PROFILE VIEW
STA. 35+00 - 41+00

Project No.	Scale	
16-329	AS NOTED	
Drawing No.	Sheet	Revision
SC	19	0

Z:\CADD_Graphics\US Projects\16-329_Naples Outfalls_Phase II\Design\90_100%_Plans\16-329_Naples Outfalls_60-90% Drawings_SW-Profile.dwg Apr 15, 2022-2:33pm

VAULT 7
TYPE "J" BOX
MANHOLE TOP = 4.9'
TOP OF VAULT = 4.9'
N INV -1.7' 30" ADS OR RCP
S INV -1.6' 24" ADS OR RCP
SW INV 0.4' 24" RCP
E INV 0.0' 24" RCP

VAULT 8
TYPE "J" BOX
MANHOLE TOP = 4.4'
TOP OF VAULT = 4.4'
N INV -1.0' 24" ADS OR RCP
NW INV 0.75' 24" ERCP
S INV -0.9' 24" ADS RCP
E INV 0.7' 24" ERCP

VAULT 9
TYPE "J" BOX
MANHOLE TOP = 4.0'
TOP OF VAULT = 4.0'
N INV -0.6' 24" ADS OR RCP
W INV -0.55' 24" RCP
SE INV -0.10' 24" RCP

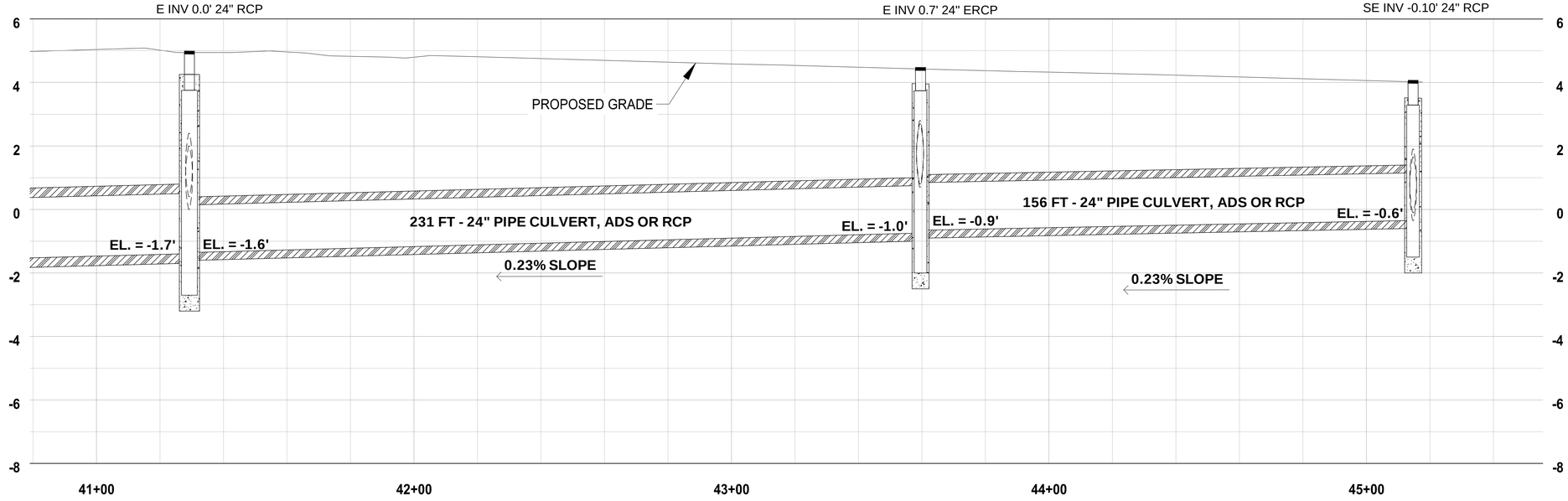

DISTANCE (FT)

GULFSHORE BLVD

SCALE: 1"=20' (H)
1"=2' (V)

Z:\CADD_Graphics\US Projects\16-329_Naples Outfalls_Phase II\Design\90_100%_Plans\16-329_Naples Outfalls_60-90% Drawings_SW-Profile.dwg Apr 15, 2022-2:33pm

Revision	By	Appd.	YY.MM.DD

Issued	By	Appd.	YY.MM.DD
ISSUED 90% DESIGN DRAWINGS TO CITY (PRELIM REVIEW)	KME	APPROVED	22.04.15
ISSUED 75% DESIGN DRAWINGS TO CITY (PRELIM REVIEW)	KME	APPROVED	21.05.13

ECE
Erickson Consulting Engineers
7201 Delainey Court
Sarasota, FL 32420
www.ericksonconsultingengineers.com

Copyright Reserved
The Contractor shall verify and be responsible for all dimensions.
DO NOT scale the drawing - any errors or omissions shall be reported to Erickson Consulting Engineers (ECE) without delay.
The Copyrights to all designs and drawings are the property of ECE.
Reproduction or use for any purpose other than that authorized by ECE is forbidden.

Client/Project
CITY OF NAPLES
735 8th St S
NAPLES, FL.
Naples Beach Restoration & Water Quality Improvement Project

File Name:
16-329_Naples Outfalls_60-90% Drawings_SW-Profile.dwg

JAW	SMT	KME	21.06.01
Dwn.	Chkd.	Dsgn.	YY.MM.DD

Title
PROFILE VIEW
STA. 41+00 - 45+50

Project No.	Scale	
16-329	AS NOTED	
Drawing No.	Sheet	Revision
SC	20	0

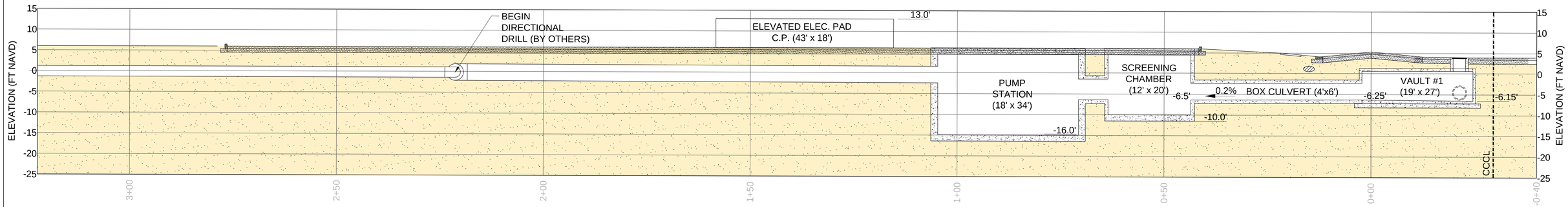

Revision	By	Appd.	YY.MM.DD

Issued	By	Appd.	YY.MM.DD
ISSUED 90% DESIGN DRAWINGS TO CITY (PRELIM REVIEW)	KME	APPROVED	22.04.15
ISSUED 75% DESIGN DRAWINGS TO CITY (PRELIM REVIEW)	KME	APPROVED	21.05.13

ECE
Erickson Consulting Engineers
7201 Delainey Court
Sarasota, FL 32420
www.ericksonconsultingengineers.com

Copyright Reserved
The Contractor shall verify and be responsible for all dimensions.
DO NOT scale the drawing - any errors or omissions shall be reported
to Erickson Consulting Engineers (ECE) without delay.
The Copyrights to all designs and drawings are the property of ECE.
Reproduction or use for any purpose other than that authorized by ECE is forbidden.

Client/Project
CITY OF NAPLES
735 8th St S
NAPLES, FL.
Naples Beach Restoration
& Water Quality
Improvement Project

File Name:
16-329_Naples Outfalls_60-90% Drawings_SW-Profile.dwg

JAW	SMT	KME	21.06.01
Dwn.	Chkd.	Dsgn.	YY.MM.DD

Title
STORM VAULT PROFILE
3RD AVE. N

Project No.	Scale	
16-329	AS NOTED	
Drawing No.	Sheet	Revision
SC	21	0

Z:\CADD_Graphics\US Projects\16-329_Naples Outfalls_Phase II\Design\90_100%_Plans\16-329_Naples Outfalls_60-90% Drawings_SW-Profile.dwg Apr 15, 2022-2:33pm

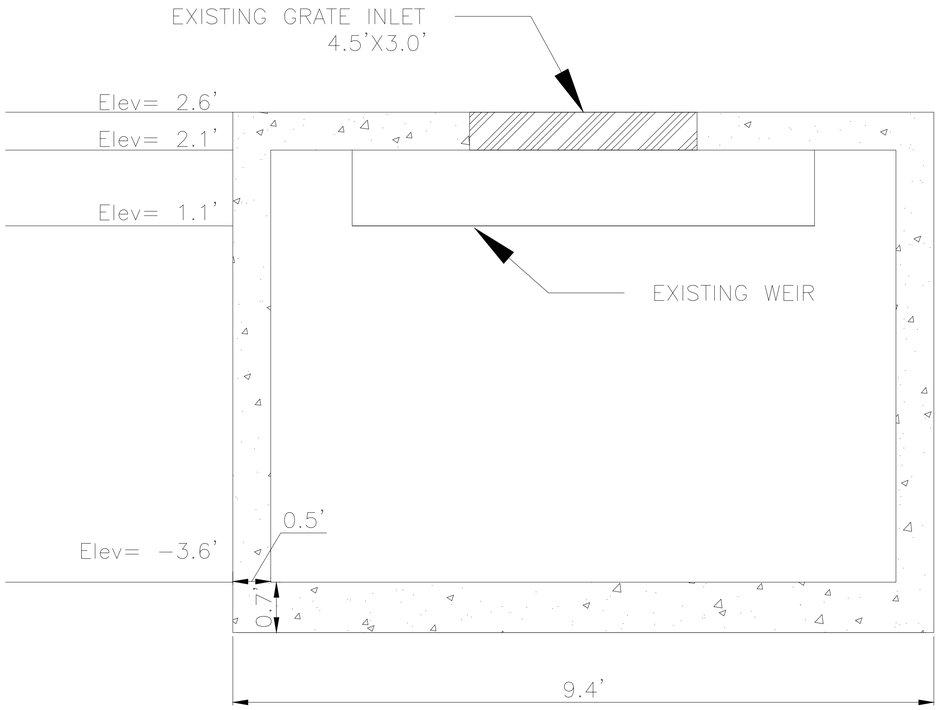

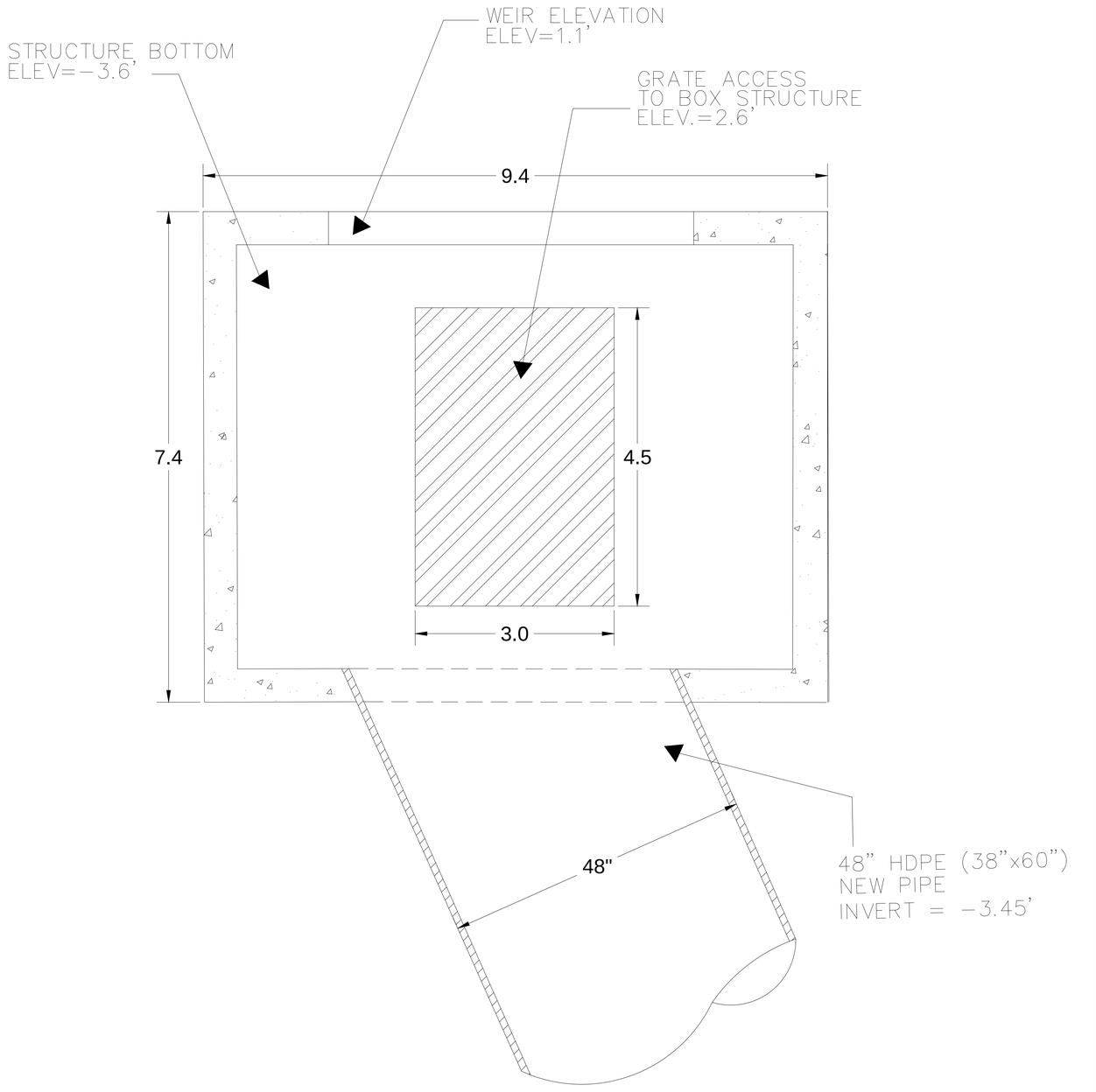

Revision	By	Appd.	YY.MM.DD

Issued	By	Appd.	YY.MM.DD
ISSUED 90% DESIGN DRAWINGS TO CITY (PRELIM REVIEW)	KME	APPROVED	22.04.15
ISSUED 75% DESIGN DRAWINGS TO CITY (PRELIM REVIEW)	KME	APPROVED	21.05.13

ECE
Erickson Consulting Engineers
7201 Delainey Court
Sarasota, FL 32420
www.ericksonconsultingengineers.com

Copyright Reserved
The Contractor shall verify and be responsible for all dimensions.
DO NOT scale the drawing - any errors or omissions shall be reported to Erickson Consulting Engineers (ECE) without delay.
The Copyrights to all designs and drawings are the property of ECE.
Reproduction or use for any purpose other than that authorized by ECE is forbidden.

Client/Project
CITY OF NAPLES
735 8th St S
NAPLES, FL.
Naples Beach Restoration & Water Quality Improvement Project

File Name: 16-329_Naples Outfalls_60-90% Drawings_SW-Details.dwg

JAW	SMT	KME	21.06.01
Dwn.	Chkd.	Dsgn.	YY.MM.DD

Title
STORMWATER CONSOLIDATION
VAULT 6-4
EXISTING CONDITIONS

Project No.	Scale	
16-329	AS NOTED	
Drawing No.	Sheet	Revision
SC	22	0

C:\Users\bkrach\AppData\Local\Temp\AcPublish_14196\16-329_Naples Outfalls_60-90% Drawings_SW-Details.dwg Apr 15, 2022-2:35pm

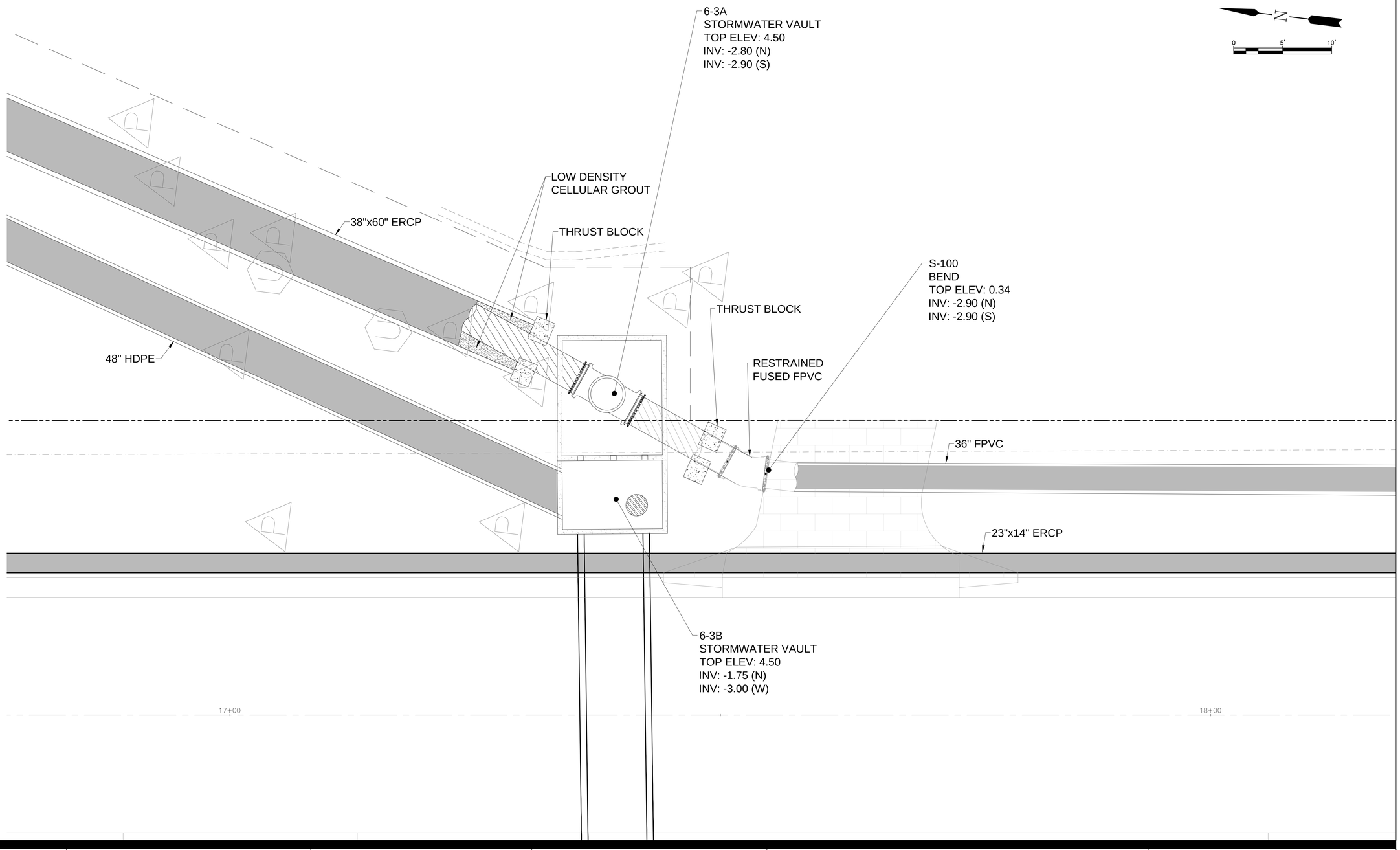

Revision	By	Appd.	YY.MM.DD

Issued	By	Appd.	YY.MM.DD
ISSUED 90% DESIGN DRAWINGS TO CITY (PRELIM REVIEW)	KME	APPROVED	22.04.15
ISSUED 75% DESIGN DRAWINGS TO CITY (PRELIM REVIEW)	KME	APPROVED	21.05.13

ECE
Erickson Consulting Engineers
7201 Delainey Court
Sarasota, FL 32420
www.ericksonconsultingengineers.com

Copyright Reserved
The Contractor shall verify and be responsible for all dimensions.
DO NOT scale the drawing - any errors or omissions shall be reported
to Erickson Consulting Engineers (ECE) without delay.
The Copyrights to all designs and drawings are the property of ECE.
Reproduction or use for any purpose other than that authorized by ECE is forbidden.

Client/Project
CITY OF NAPLES
735 8th St S
NAPLES, FL.
Naples Beach Restoration
& Water Quality
Improvement Project

File Name:
16-329_Naples Outfalls_90-100% Drawings_SW-Plan.dwg

JAW	SMT	KME	21.06.01
Dwn.	Chkd.	Dsgn.	YY.MM.DD

Title
STORMWATER CONSOLIDATION
VAULT 6-3A AND 6-3B PROPOSED
PLAN VIEW

Project No.	Scale	
16-329	AS NOTED	
Drawing No.	Sheet	Revision
SC	23	0

Z:\CADD_Graphics\US Projects\16-329_Naples Outfalls_Phase II\Design\90_100%_Plans\16-329_Naples Outfalls_90-100% Drawings_SW-Plan.dwg Apr 15, 2022 - 2:37pm

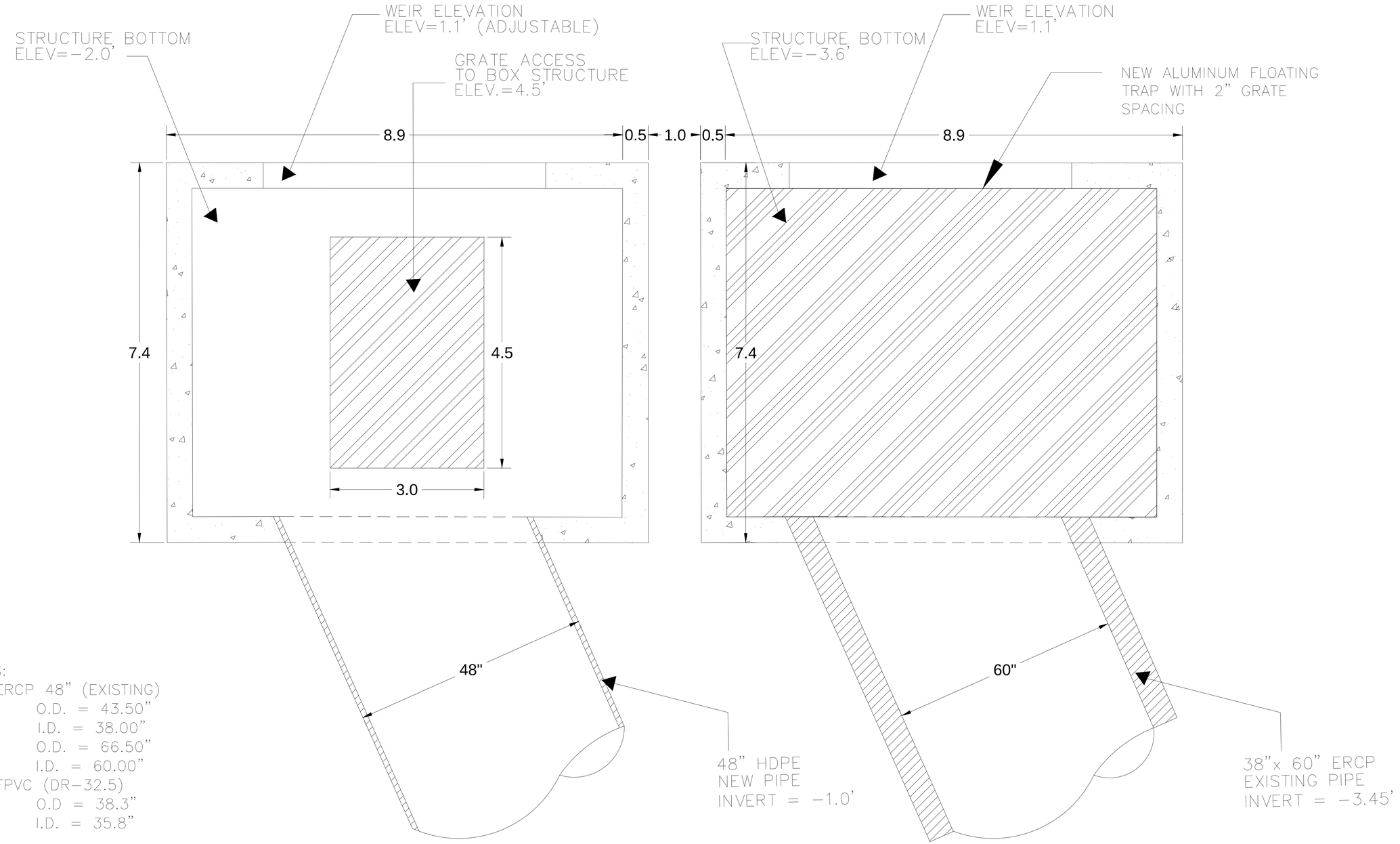

NOTES:
1. ERCP 48" (EXISTING)
RISE: O.D. = 43.50"
I.D. = 38.00"
SPAN: O.D. = 66.50"
I.D. = 60.00"
2. FPVC (DR-32.5)
O.D = 38.3"
I.D. = 35.8"

Revision	By	Appd.	YY.MM.DD

Issued	By	Appd.	YY.MM.DD
ISSUED 90% DESIGN DRAWINGS TO CITY (PRELIM REVIEW)	KME	APPROVED	22.04.15
ISSUED 75% DESIGN DRAWINGS TO CITY (PRELIM REVIEW)	KME	APPROVED	21.05.13

ECE
Erickson Consulting Engineers
7201 Delainey Court
Sarasota, FL 32420
www.ericksonconsultingengineers.com

Copyright Reserved
The Contractor shall verify and be responsible for all dimensions. DO NOT scale the drawing - any errors or omissions shall be reported to Erickson Consulting Engineers (ECE) without delay.
The Copyrights to all designs and drawings are the property of ECE. Reproduction or use for any purpose other than that authorized by ECE is forbidden.

Client/Project
CITY OF NAPLES
735 8th St S
NAPLES, FL.
Naples Beach Restoration & Water Quality Improvement Project

File Name: 16-329_Naples Outfalls_60-90% Drawings_SW-Details.dwg

Dwn.	Chkd.	Dsgn.	YY.MM.DD
JAW	SMT	KME	21.06.01

Title
STORMWATER CONSOLIDATION
VAULT 6-4 PROPOSED
PLAN VIEW

Project No.	Scale	
16-329	AS NOTED	
Drawing No.	Sheet	Revision
SC	24	0

C:\Users\bkrach\AppData\Local\Temp\AcPublish_14196\16-329_Naples Outfalls_60-90% Drawings_SW-Details.dwg Apr 15, 2022 - 2:35pm

DEBRIS FLOATABLES TRAP

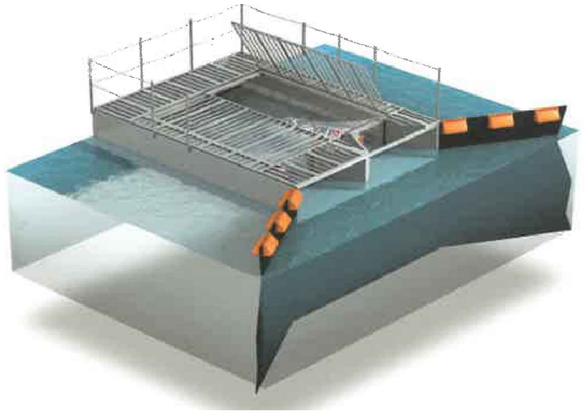

SOUTHEAST VIEW

WEIR BOX (6-4A)

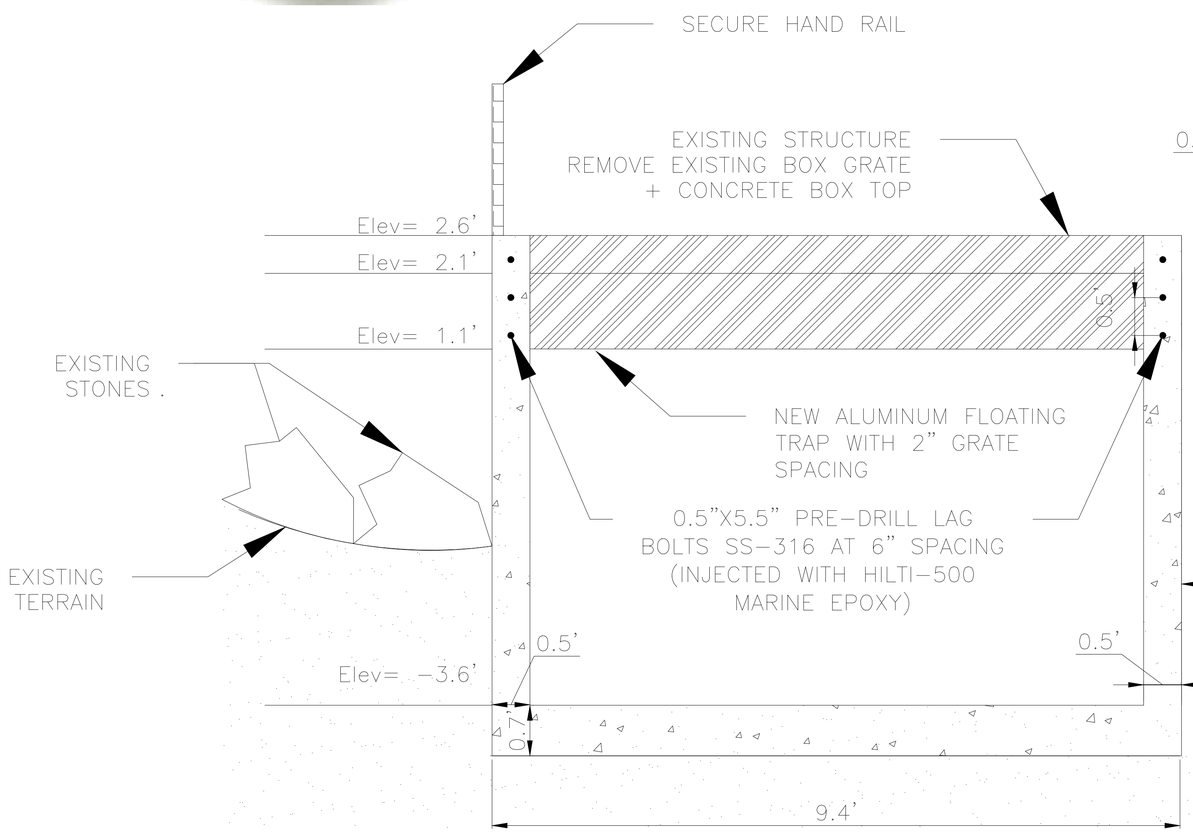

WEIR BOX (6-4B)

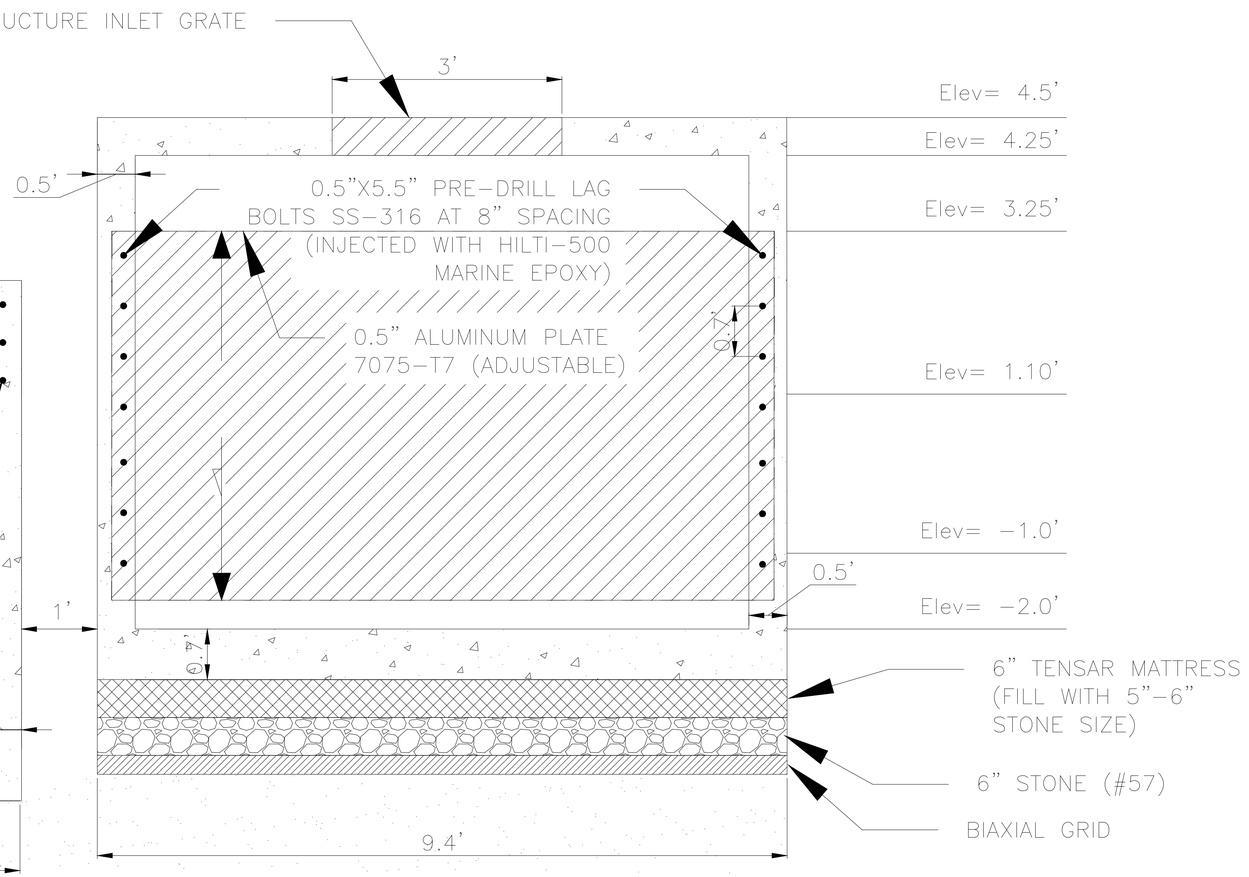

Revision	By	Appd.	YY.MM.DD

Issued	By	Appd.	YY.MM.DD
ISSUED 90% DESIGN DRAWINGS TO CITY (PRELIM REVIEW)	KME	APPROVED	22.04.15
ISSUED 75% DESIGN DRAWINGS TO CITY (PRELIM REVIEW)	KME	APPROVED	21.05.13

ECE
Erickson Consulting Engineers
7201 Delainey Court
Sarasota, FL 32420
www.ericksonconsultingengineers.com

Copyright Reserved
The Contractor shall verify and be responsible for all dimensions.
DO NOT scale the drawing - any errors or omissions shall be reported
to Erickson Consulting Engineers (ECE) without delay.
The Copyrights to all designs and drawings are the property of ECE.
Reproduction or use for any purpose other than that authorized by ECE is forbidden.

Client/Project
CITY OF NAPLES
735 8th St S
NAPLES, FL.
Naples Beach Restoration & Water Quality Improvement Project

File Name: 16-329_Naples Outfalls_60-90% Drawings_SW-Details.dwg

Dwn.	Chkd.	Dsgn.	YY.MM.DD
JAW	SMT	KME	21.06.01

Title
STORMWATER CONSOLIDATION
VAULT 6-4 PROPOSED
CROSS-SECTION VIEW

Project No.	Scale	
16-329	AS NOTED	
Drawing No.	Sheet	Revision
SC	25	0

C:\Users\bkrach\AppData\Local\Temp\AcPublish_14196\16-329_Naples Outfalls_60-90% Drawings_SW-Details.dwg Apr 15, 2022-2:35pm

VAULT 6-3 (ALLIGATOR LAKE)
PLAN VIEW

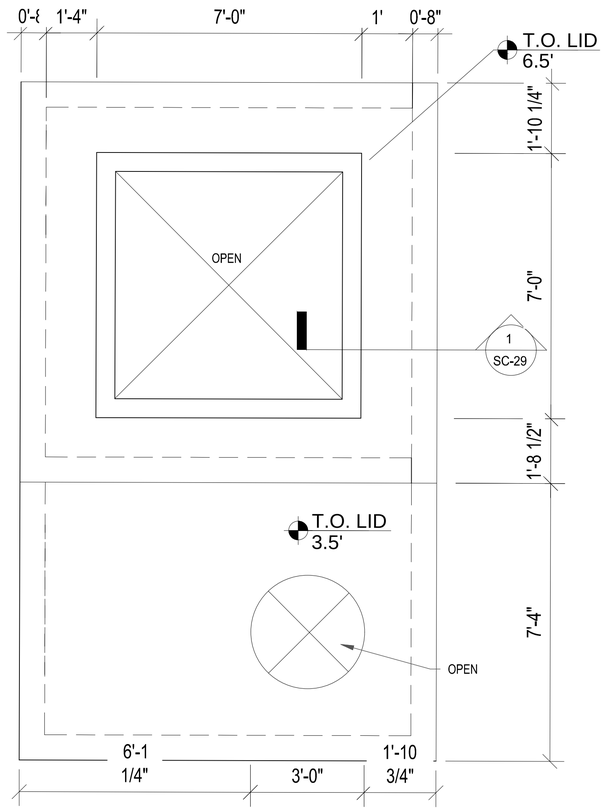

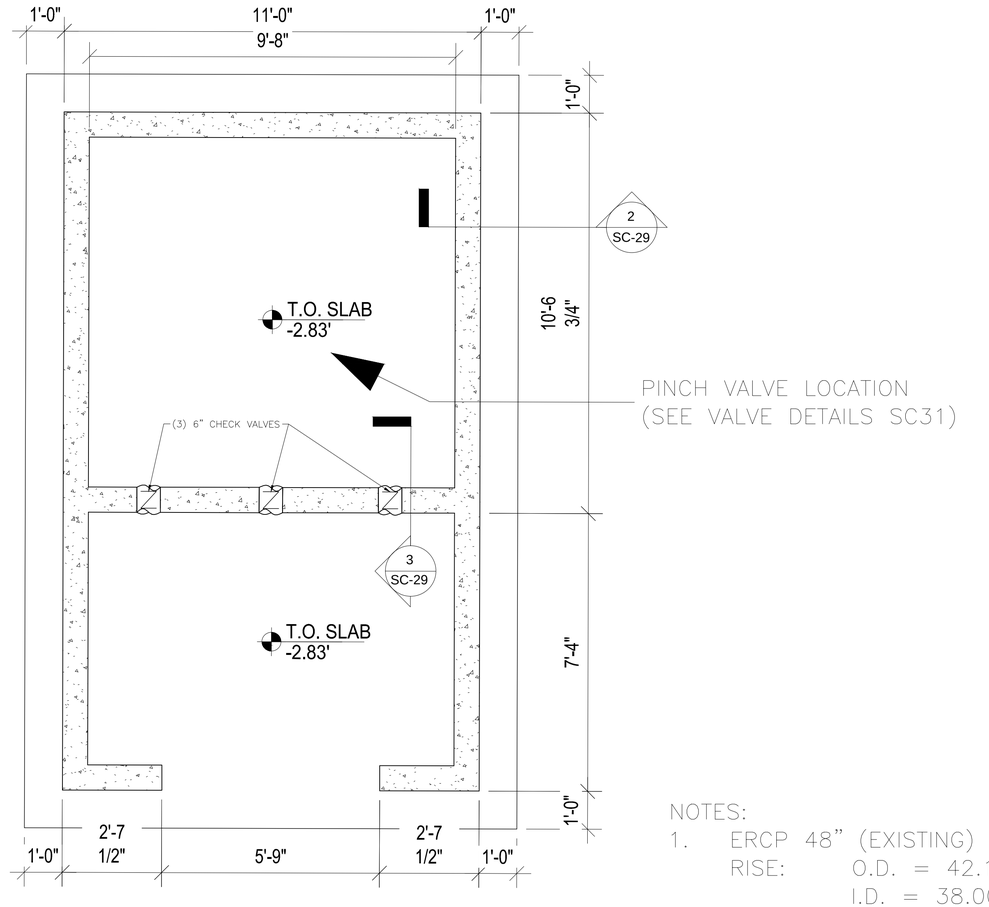

NOTES:

1. ERCP 48" (EXISTING)
   RISE: O.D. = 42.17"
   I.D. = 38.00"
   SPAN: O.D. = 64.17"
   I.D. = 60.00"
2. FPVC (DR-32.5)
   O.D = 38.3"
   I.D. = 35.8"

Revision	By	Appd.	YY.MM.DD

Issued	By	Appd.	YY.MM.DD
ISSUED 90% DESIGN DRAWINGS TO CITY (PRELIM REVIEW)	KME	APPROVED	22.04.15
ISSUED 75% DESIGN DRAWINGS TO CITY (PRELIM REVIEW)	KME	APPROVED	21.05.13

SNELL ENGINEERING CONSULTANTS
1617 STATE STREET, SUITE 202, SARASOTA, FL 34236
P: 941.954.0681 F: 206.359.2777
snellengineering.com
...SUPPORTING ARCHITECTURE

ECE Erickson Consulting Engineers
7201 Delainey Court
Sarasota, FL 32420
www.ericksonconsultingengineers.com

Copyright Reserved
The Contractor shall verify and be responsible for all dimensions.
DO NOT scale the drawing - any errors or omissions shall be reported to Erickson Consulting Engineers (ECE) without delay.
The Copyrights to all designs and drawings are the property of ECE.
Reproduction or use for any purpose other than that authorized by ECE is forbidden.

Client/Project
CITY OF NAPLES
735 8th St S
NAPLES, FL.
Naples Beach Restoration & Water Quality Improvement Project

File Name: 16-329_Naples Outfalls_60-90% Drawings_SW-Details.dwg

Dwn.	Chkd.	Dsgn.	YY.MM.DD
JAW	SMT	KME	21.06.01

Title
STORMWATER CONSOLIDATION
VAULT 6-3 PROPOSED
PLAN VIEW

Project No.	Scale	
16-329	AS NOTED	
Drawing No.	Sheet	Revision
SC	26	0

C:\Users\bkrach\AppData\Local\Temp\AcPublish_14196\16-329_Naples Outfalls_60-90% Drawings_SW-Details.dwg Apr 15, 2022 - 2:35pm

VAULT 6-3 (ALLIGATOR LAKE)
CROSS-SECTION

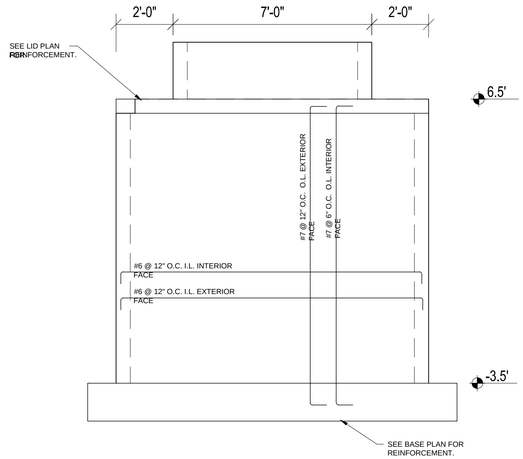

EAST VIEW

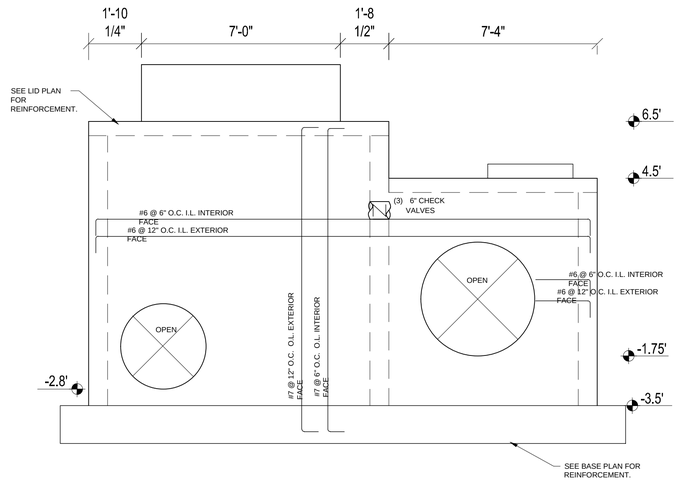

NORTH VIEW

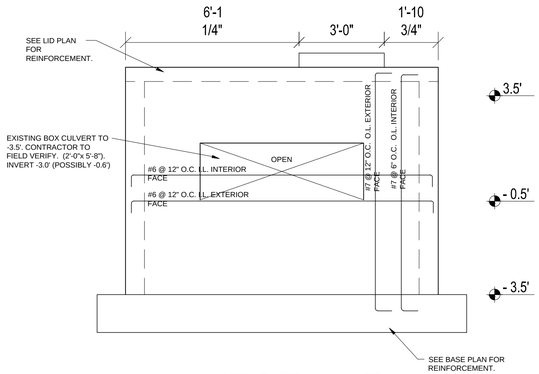

WEST VIEW

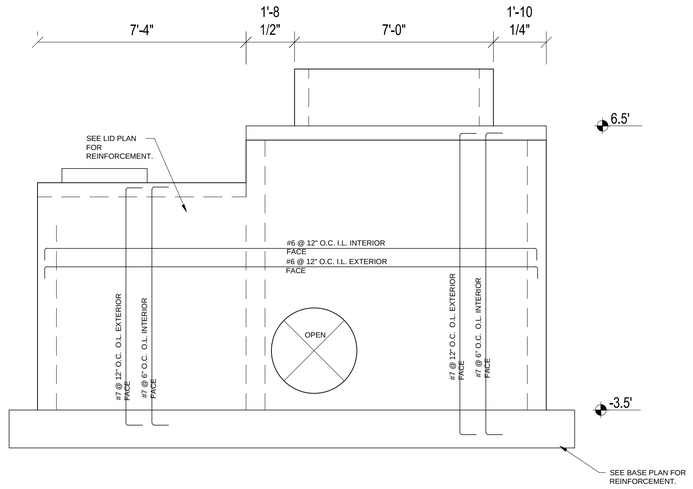

SOUTH VIEW

Revision	By	Appd.	YY.MM.DD

Issued	By	Appd.	YY.MM.DD
ISSUED 90% DESIGN DRAWINGS TO CITY (PRELIM REVIEW)	KME	APPROVED	22.04.15
ISSUED 75% DESIGN DRAWINGS TO CITY (PRELIM REVIEW)	KME	APPROVED	21.05.13

SNELL ENGINEERING CONSULTANTS
1617 State Street, Suite 202, Sarasota, FL 34236
P: 941.954.0681 F: 206.339.2727
snelleng@earthlink.net
...SUPPORTING ARCHITECTURE

ECE Erickson Consulting Engineers
7201 Delainey Court
Sarasota, FL 32420
www.ericksonconsultingengineers.com

Copyright Reserved
The Contractor shall verify and be responsible for all dimensions.
DO NOT scale the drawing - any errors or omissions shall be reported to Erickson Consulting Engineers (ECE) without delay.
The Copyrights to all designs and drawings are the property of ECE.
Reproduction or use for any purpose other than that authorized by ECE is forbidden.

Client/Project
CITY OF NAPLES
735 8th St S
NAPLES, FL.
Naples Beach Restoration & Water Quality Improvement Project

File Name:
16-329_Naples Outfalls_60-90% Drawings_SW-Details.dwg

Dwn.	Chkd.	Dsgn.	YY.MM.DD
JAW	SMT	KME	21.06.01

Title
STORMWATER CONSOLIDATION
VAULT 6-3 PROPOSED
CROSS-SECTION VIEW

Project No.	Scale	
16-329	AS NOTED	
Drawing No.	Sheet	Revision
SC	27	0

C:\Users\bkrach\AppData\Local\Temp\AcPublish_14196\16-329_Naples Outfalls_60-90% Drawings_SW-Details.dwg Apr 15, 2022 - 2:35pm

BAR SIZE	TENSION (CLASS 'B') LAP SPLICE LENGTH												COMPRESSION LAP / SPLICE LENGTH
	TOP BARS						OTHER BARS						ALL BARS
	3000 PSI	4000 PSI	5000 PSI	6000 PSI	8000 PSI	10000 PSI	3000 PSI	4000 PSI	5000 PSI	6000 PSI	8000 PSI	10000 PSI	ALL CONCRETE WITH f'_c 3000 psi
#3	28	24	22	20	17	16	22	19	17	15	13	12	12
#4	37	32	29	26	23	21	29	25	22	20	18	16	15
#5	47	40	36	33	29	26	36	31	28	25	22	20	19
#6	56	48	43	40	34	31	43	37	33	31	26	24	23
#7	81	70	63	58	50	45	63	54	49	44	38	34	27
#8	93	80	72	66	57	51	72	62	55	51	44	39	30
#9	105	91	81	74	64	57	81	70	63	57	49	44	34
#10	118	102	91	83	72	65	91	79	70	64	56	50	38
#11	131	113	101	93	80	72	101	87	78	71	62	55	43
#14	121	105	94	86	74	66	93	81	72	66	57	51	-
#18	161	139	125	114	99	88	124	107	96	88	76	68	-

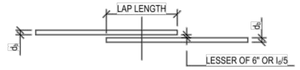

NOTES:

1. REFER TO "HOOKED REINFORCEMENT TENSION DEVELOPMENT LENGTH SCHEDULE" WHEN THE STRAIGHT DEVELOPMENT LENGTH IN TENSION CANNOT BE ACCOMMODATED IN THE CONCRETE SECTION.
2. ALWAYS USE TENSION LAP SPLICE LENGTH VALUES, UNLESS THE PLANS OR DETAILS NOTE OTHERWISE.
3. TABULATED DEVELOPMENT AND LAP SPLICE LENGTHS ARE BASED ON REINFORCING STEEL YIELD STRENGTH Fy=60KSI, NORMAL WEIGHT CONCRETE, AND CLASS B LAPS.
4. TOP BARS ARE DEFINED AS HORIZONTAL BARS WITH MORE THAN 12 INCHES OF FRESH CONCRETE CAST IN THE MEMBER BELOW THE DEVELOPMENT LENGTH OR SPLICE. TOP BAR FACTOR DOES NOT APPLY TO BARS IN WALLS.
5. WHEN DIFFERENT BAR DIAMETERS ARE SPLICED, USE SMALLER BAR LAP SPLICE LENGTH.
6. ALL TABULATED VALUES ARE MINIMUM LENGTH, IN CASE OF CONFLICT WITH PLANS, SECTIONS, OR DETAILS USE LONGER LENGTH.
7. d/b = BAR DIAMETER
8. l/d = DEVELOPMENT, LAP OR SPLICE LENGTH.
9. ADJUST TABULATED LENGTH BY THE FOLLOWING FACTORS WHERE APPLICABLE. NOTE THAT FACTORS ARE CUMULATIVE: (E.G. 1.30x1.50 = 1.95)
   - A. LIGHT WEIGHT CONCRETE: 1.30
   - B. 3 OR LESS BUNDLED BARS: 1.20
   - C. 4 OR MORE BUNDLED BARS: 1.33
   - D. CLEAR SPACING LESS THAN 2d/b AND CLEAR COVER LESS THAN d/b: 1.50
   - E. CLASS A LAP SPLICE: 0.77
   - F. EPOXY COATED BARS 1.50
10. WELDED AND/OR MECHANICAL SPLICES MAY BE USED AT THE GENERAL CONTRACTOR'S OPTION PROVIDED THAT THE SPLICE IS CAPABLE OF DEVELOPING AT LEAST 125% OF THE YIELD STRENGTH OF THE LARGER BAR IN TENSION. WHERE WELDED AND/OR MECHANICAL SPLICES ARE TO BE USED, THE GENERAL CONTRACTOR SHALL SUBMIT FULL DATA OF THE PROPOSED MATERIAL, PROCEDURES, AND INSTALLATION INSTRUCTIONS TO THE ENGINEER FOR REVIEW AS A SHOP DRAWING SUBMISSION.
11. USE MECHANICAL COUPLERS FOR #14 AND LARGER BARS.
12. LAP SPLICES IN CONCRETE MASONRY SHALL BE AS SPECIFIED IN STRUCTURAL NOTES.

TYP. STRAIGHT REINFORCEMENT DEVELOPMENT AND SPLICE LENGTH SCHEDULE

SCALE: NTS

BAR SIZE	HOOKED TENSION DEVELOPMENT LENGTH (l_{dh}) INCHES					
	3000 PSI	4000 PSI	5000 PSI	6000 PSI	8000 PSI	10000 PSI
#3	9	7	7	6	6	6
#4	11	10	9	8	7	6
#5	14	12	11	10	9	8
#6	17	15	13	12	10	9
#7	19	17	15	14	12	11
#8	22	19	17	16	14	12
#9	25	22	19	18	15	14
#10	28	24	22	20	17	16
#11	31	27	24	22	19	17
#14	37	32	29	27	23	21
#18	50	43	39	35	31	27

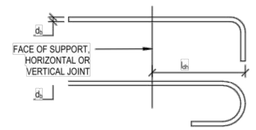

NOTES:

1. SEE TYPICAL TIE AND STIRRUP HOOKS DETAIL FOR ADDITIONAL INFORMATION.
2. TABULATED DEVELOPMENT LENGTH ARE BASED ON REINFORCING STEEL YIELD STRENGTH F/y = 60 KSI AND NORMAL WEIGHT CONCRETE.
3. ALL TABULATED VALUES ARE MINIMUM LENGTHS. IN CASE OF CONFLICT WITH THE PLANS, SECTIONS, OR DETAILS, USE THE LONGER LENGTH.
4. d_b = BAR DIAMETER
5. l_{dh} = DEVELOPMENT LENGTH
6. ADJUST TABULATED LENGTHS BY THE FOLLOWING FACTORS WHERE APPLICABLE. NOTE THAT THE FACTORS ARE CUMULATIVE.
   - A. REINFORCING BAR STRENGTH OTHER THAN 60 KSI: (F_y/60 KSI)
   - B. LIGHT WEIGHT CONCRETE: 1.30
   - C. EPOXY COATED BARS 1.20

TYP. HOOKED REINFORCEMENT TENSION DEVELOPMENT LENGTH SCHEDULE

SCALE: NTS

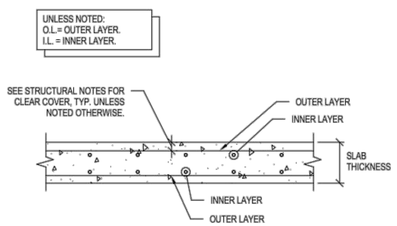

SLAB REBAR LAYERING DIAGRAM
NOT TO SCALE

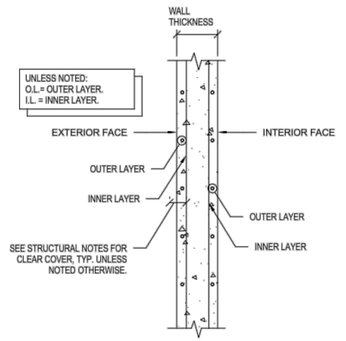

WALL REBAR LAYERING DIAGRAM
NOT TO SCALE

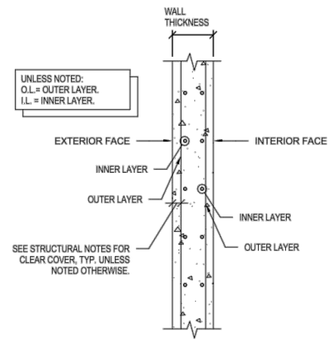

WALL REBAR LAYERING DIAGRAM
NOT TO SCALE

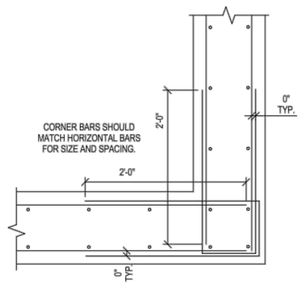

CORNER REINF. DETAIL

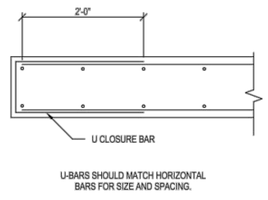

END WALL REINF. DETAIL

SHEARWALL TYPICAL DETAILS

NOT TO SCALE

Revision	By	Appd.	YY.MM.DD

Issued	By	Appd.	YY.MM.DD
ISSUED 90% DESIGN DRAWINGS TO CITY (PRELIM REVIEW)	KME	APPROVED	22.04.15
ISSUED 75% DESIGN DRAWINGS TO CITY (PRELIM REVIEW)	KME	APPROVED	21.05.13

SNELL ENGINEERING CONSULTANTS
1577 STATE ROAD, SUITE 202, SARASOTA, FL 34236
P: 941.954.0681 F: 305.559.2777
snellengineering.com
...SUPPORTING ARCHITECTURE

ECE
Erickson Consulting Engineers
7201 Delainey Court
Sarasota, FL 32420
www.ericksonconsultingengineers.com

Copyright Reserved
The Contractor shall verify and be responsible for all dimensions. DO NOT scale the drawing - any errors or omissions shall be reported to Erickson Consulting Engineers (ECE) without delay. The Copyrights to all designs and drawings are the property of ECE. Reproduction or use for any purpose other than that authorized by ECE is forbidden.

Client/Project
CITY OF NAPLES
735 8th St S
NAPLES, FL.
Naples Beach Restoration & Water Quality Improvement Project

File Name: 16-329_Naples Outfalls_60-90% Drawings_SW-Details.dwg

JAW	SMT	KME	21.06.01
Dwn.	Chkd.	Dsgn.	YY.MM.DD

Title
STORMWATER CONSOLIDATION VAULT GENERAL DETAILS

Project No.	Scale	
16-329	AS NOTED	
Drawing No.	Sheet	Revision
SC	28	0

C:\Users\bkrach\AppData\Local\Temp\AcPublish_14196\16-329_Naples Outfalls_60-90% Drawings_SW-Details.dwg Apr 15, 2022 - 2:35pm

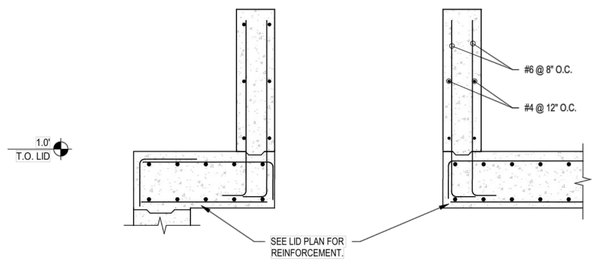

1 S-5 SECTION 3/4" = 1'-0"

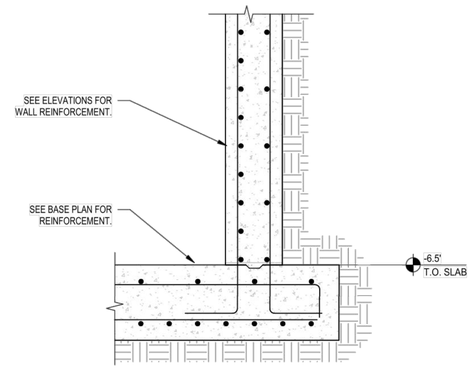

2 S-5 SECTION 3/4" = 1'-0"

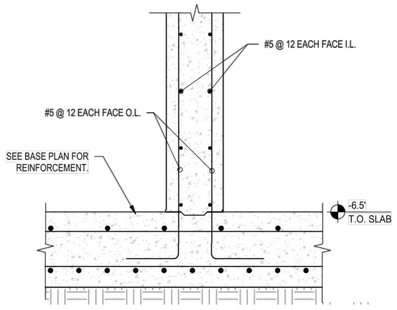

3 S-5 SECTION 3/4" = 1'-0"

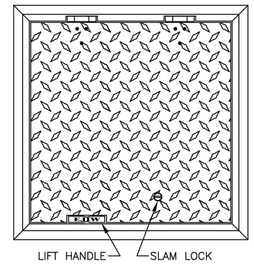

PLAN VIEW

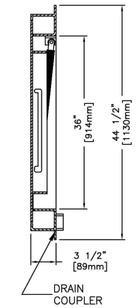

SECTION VIEW

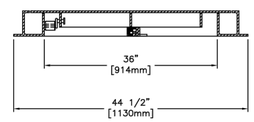

SECTION VIEW

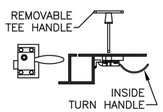

STAINLESS STEEL
SLAM LOCK

DRAWING NOT TO SCALE

NOTES:

1.) MATERIAL SHALL BE 6061-T6 ALUMINUM FOR BARS, ANGLES, AND EXTRUSION. 1/4" DIAMOND PLATE SHALL BE 5086 ALUMINUM.

2.) UNIT DESIGNED PEDESTRIAN RATED, FOR A MINIMUM LIVE LOAD OF 300 LBS./SQ.FT., DEFLECTION SHALL NOT EXCEED 1/150 OF THE SPAN.

3.) UNIT SUPPLIED WITH A HEAVY DUTY STAINLESS STEEL PNEU-SPRING, FOR EASE OF OPERATION WHEN OPENING COVER. COVER SHALL BE COUNTERBALANCED, SO ONE PERSON CAN EASILY OPEN THE HATCH DOOR.

4.) FRAME SHALL BE OF EXTRUDED ALUMINUM WITH A CONTINUOUS 1-1/4" ANCHOR FLANGE. A DOVE TAIL GROOVE SHALL BE EXTRUDED INTO THE SEAT OF THE FRAME FOR A 1/8" SILICONE GASKET.

5.) EACH HATCH SHALL BE EQUIPPED WITH AN ALUMINUM HOLD OPEN ARM. DOOR SHALL LOCK OPEN IN THE 90 DEGREE POSITION. HOLD OPEN ARM SHALL BE FASTENED TO THE FRAME WITH A 1/2" GRADE 316 STAINLESS STEEL BOLT.

6.) HINGES SHALL BE OF HEAVY DUTY DESIGN. MATERIAL SHALL BE GRADE 316 STAINLESS STEEL. EACH HINGE SHALL HAVE A GRADE 316 STAINLESS STEEL, 3/8" DIAMETER HINGE PIN. HINGE SHALL BE FASTENED TO THE CHANNEL AND DIAMOND PLATE WITH GRADE 316 STAINLESS STEEL BOLTS AND NY-LOK NUTS.

7.) EXTERIOR OF FRAME WHICH COMES IN CONTACT WITH CONCRETE SHALL HAVE ONE COAT BLACK PRIMER.

8.) EACH HATCH SHALL BE SUPPLIED WITH A GRADE 316 STAINLESS STEEL SLAM LOCK, WITH KEYWAY PROTECTED BY A THREADED REMOVABLE PLUG. PLUG SHALL BE FLUSH WITH TOP OF 1/4" DIAMOND PLATE. SLAM LOCK SHALL BE FASTENED WITH GRADE 316 STAINLESS STEEL BOLTS AND WASHERS.

9.) EACH HATCH SHALL BE EQUIPPED WITH AN ALUMINUM LIFT HANDLE. LIFT HANDLE SHALL BE FLUSH WITH TOP OF 1/4" DIAMOND PLATE.

10.) EACH "CLS1" STYLE HATCH IS SUPPLIED WITH A 1-1/2" THREADED DRAIN COUPLER ON THE UNDERSIDE OF CHANNEL FRAME, FOR PIPE CONNECTION.

11.) HATCH SHALL BE FINISHED WITH DUPONT CORLAR MASTIC EPOXY, DUPONT CORLAR ACTIVATOR VF5254, DUPONT THINNER Y321035 #1032 LIGHT COFFEE

EJIW EAST JORDAN IRON WORKS EST.1883
800-626-4653
www.ejiw.com
MADE IN USA

PRODUCT NUMBER	H36361612
CATALOG NUMBER	CLS1 36X36
	ALUM HATCH
LOAD RATING	PEDESTRIAN
COATING	SEE NOTE 11
ESTIMATED WEIGHT	HATCH: 97 LBS 44kg
MATERIAL SPECIFICATION	HATCH – ALUMINUM SEE NOTES
OPEN AREA	N/A
√ DESIGNATES MACHINE SURFACE	
DRAWN AWM	DATE 06/15/2010
LAST REVISED	DATE
REFERENCE INFORMATION	NCR10-1352

CONFIDENTIAL: This drawing is the property of East Jordan Iron Works, Inc. and embodies confidential information, trade secret information, and/or know how that is the property of East Jordan Iron Works, Inc. © Copyright 2007 East Jordan Iron Works, Inc.

Revision	By	Appd.	YY.MM.DD

Issued	By	Appd.	YY.MM.DD
ISSUED 90% DESIGN DRAWINGS TO CITY (PRELIM REVIEW)	KME	APPROVED	22.04.15
ISSUED 75% DESIGN DRAWINGS TO CITY (PRELIM REVIEW)	KME	APPROVED	21.05.13

SNELL
ENGINEERING CONSULTANTS
1977 STATE STREET, SUITE 202, SARASOTA, FL 34236
P: 941.954.0681 F: 954.559.2777
snellengineering@gmail.com
...SUPPORTING ARCHITECTURE

ECE
Erickson Consulting Engineers
7201 Delainey Court
Sarasota, FL 32420
www.ericksonconsultingengineers.com

Copyright Reserved
The Contractor shall verify and be responsible for all dimensions. DO NOT scale the drawing - any errors or omissions shall be reported to Erickson Consulting Engineers (ECE) without delay.
The Copyrights to all designs and drawings are the property of ECE. Reproduction or use for any purpose other than that authorized by ECE is forbidden.

Client/Project
CITY OF NAPLES
735 8th St S
NAPLES, FL.
Naples Beach Restoration & Water Quality Improvement Project

File Name: 16-329_Naples Outfalls_60-90% Drawings_SW-Details.dwg

Dwn.	Chkd.	Dsgn.	YY.MM.DD
JAW	SMT	KME	21.06.01

Title
STORMWATER CONSOLIDATION
VAULT 6-3 DETAILS

Project No.	Scale	
16-329	AS NOTED	
Drawing No.	Sheet	Revision
SC	29	0

C:\Users\bkrach\AppData\Local\Temp\AcPublish_14196\16-329_Naples Outfalls_60-90% Drawings_SW-Details.dwg Apr 15, 2022 - 2:35pm

VAULT 1 (3RD AVE N)
PLAN VIEW

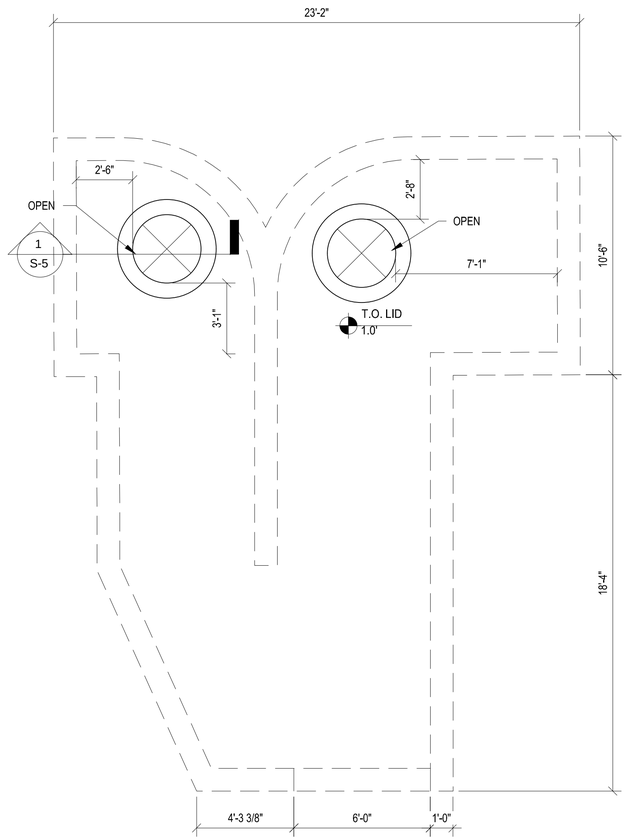

EAST ELEVATION

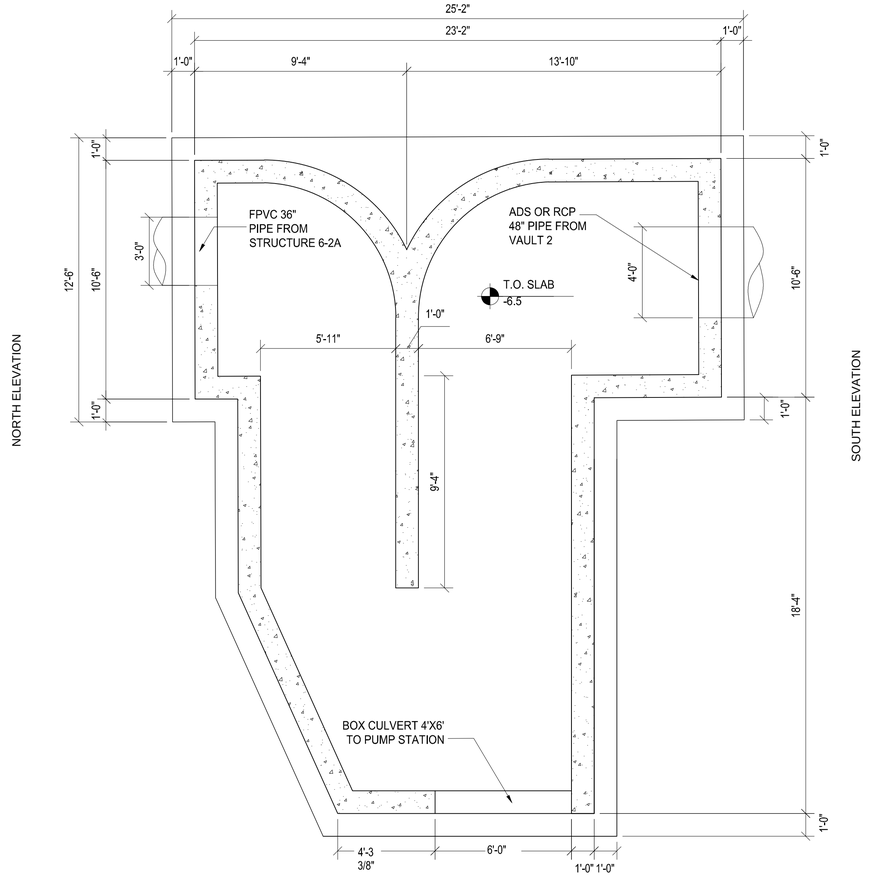

NORTH ELEVATION

SOUTH ELEVATION

WEST ELEVATION

C:\Users\bkroch\AppData\Local\Temp\AcPublish_14196\16-329_Naples Outfalls_60-90% Drawings_SW-Details.dwg Apr 15, 2022-2:35pm

Revision	By	Appd.	YY.MM.DD

Issued	By	Appd.	YY.MM.DD
ISSUED 90% DESIGN DRAWINGS TO CITY (PRELIM REVIEW)	KME	APPROVED	22.04.15
ISSUED 75% DESIGN DRAWINGS TO CITY (PRELIM REVIEW)	KME	APPROVED	21.05.13

SNELL
ENGINEERING CONSULTANTS
1617 State Street, Suite 202, Sarasota, FL 34236
P. 941.954.0681 F. 206.339.2777
snellengineering.com
SUPPORTING ARCHITECTURE

ECE
Erickson Consulting Engineers
7201 Delainey Court
Sarasota, FL 32420
www.ericksonconsultingengineers.com

Copyright Reserved
The Contractor shall verify and be responsible for all dimensions.
DO NOT scale the drawing - any errors or omissions shall be reported
to Erickson Consulting Engineers (ECE) without delay.
The Copyrights to all designs and drawings are the property of ECE.
Reproduction or use for any purpose other than that authorized by ECE is forbidden.

Client/Project
CITY OF NAPLES
735 8th St S
NAPLES, FL.

Naples Beach Restoration
& Water Quality
Improvement Project

File Name:
16-329_Naples Outfalls_60-90% Drawings_SW-Details.dwg

Dwn.	Chkd.	Dsgn.	YY.MM.DD
JAW	SMT	KME	21.06.01

Title
STORMWATER CONSOLIDATION
VAULT 1 PROPOSED
PLAN VIEW

Project No.	Scale	
16-329	AS NOTED	
Drawing No.	Sheet	Revision
SC	30	0

VAULT 1 (3RD AVE N)
CROSS-SECTION

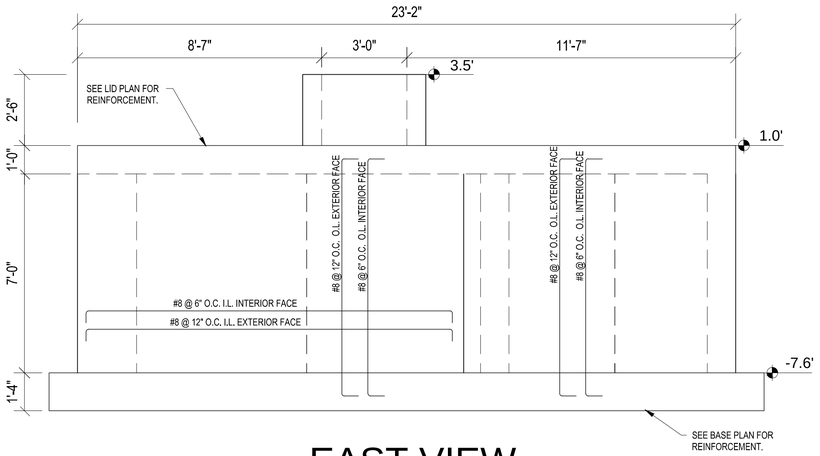

EAST VIEW

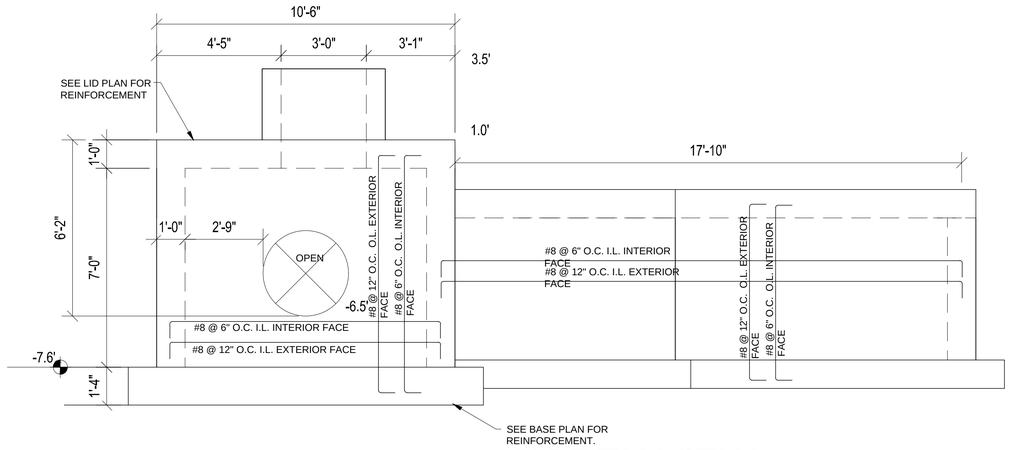

NORTH VIEW

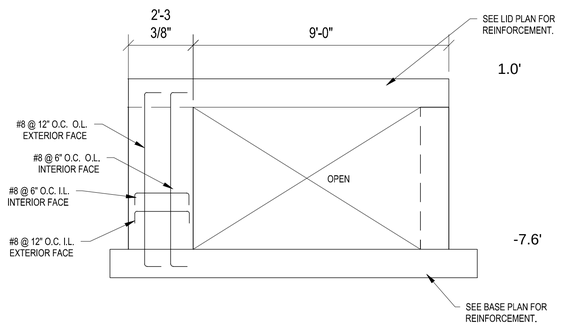

WEST VIEW

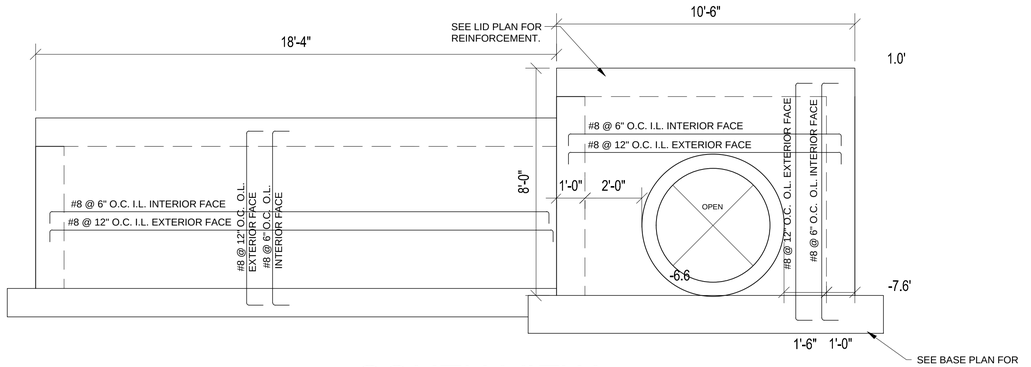

SOUTH VIEW

Revision	By	Appd.	YY.MM.DD

Issued	By	Appd.	YY.MM.DD
ISSUED 90% DESIGN DRAWINGS TO CITY (PRELIM REVIEW)	KME	APPROVED	22.04.15
ISSUED 75% DESIGN DRAWINGS TO CITY (PRELIM REVIEW)	KME	APPROVED	21.05.13

SNELL ENGINEERING CONSULTANTS

ECE Erickson Consulting Engineers

7201 Delainey Court
Sarasota, FL 32420
www.ericksonconsultingengineers.com

Copyright Reserved
The Contractor shall verify and be responsible for all dimensions.
DO NOT scale the drawing - any errors or omissions shall be reported to Erickson Consulting Engineers (ECE) without delay.
The Copyrights to all designs and drawings are the property of ECE.
Reproduction or use for any purpose other than that authorized by ECE is forbidden.

Client/Project
CITY OF NAPLES
735 8th St S
NAPLES, FL.
Naples Beach Restoration & Water Quality Improvement Project

File Name:
16-329_Naples Outfalls_60-90% Drawings_SW-Details.dwg

Dwn.	Chkd.	Dsgn.	YY.MM.DD
JAW	SMT	KME	21.06.01

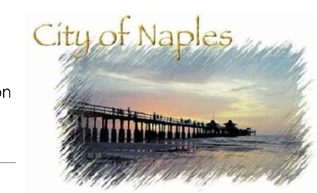

Title
STORMWATER CONSOLIDATION
VAULT 1 PROPOSED
CROSS-SECTION VIEW

Project No.	Scale
16-329	AS NOTED

Drawing No.	Sheet	Revision
SC	31	0

C:\Users\bkrach\AppData\Local\Temp\AcPublish_14196\16-329_Naples Outfalls_60-90% Drawings_SW-Details.dwg Apr 15, 2022-2:35pm

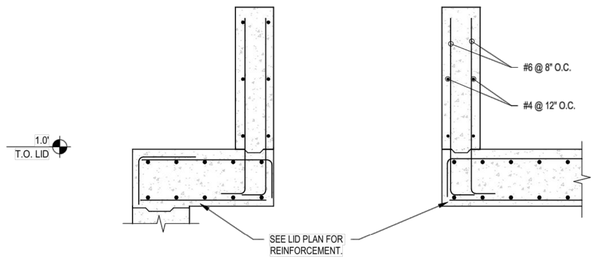

1 S-5 SECTION 3/4" = 1'-0"

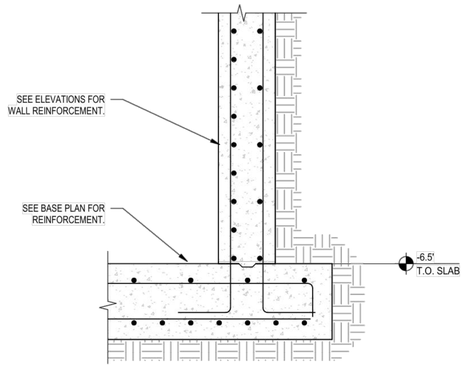

2 S-5 SECTION 3/4" = 1'-0"

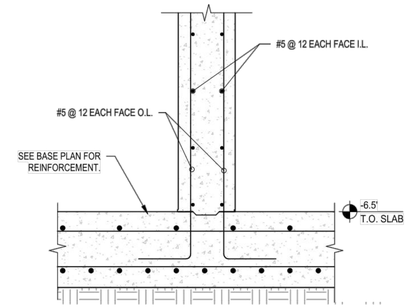

3 S-5 SECTION 3/4" = 1'-0"

Revision	By	Appd.	YY.MM.DD

Issued	By	Appd.	YY.MM.DD
ISSUED 90% DESIGN DRAWINGS TO CITY (PRELIM REVIEW)	KME	APPROVED	22.04.15
ISSUED 75% DESIGN DRAWINGS TO CITY (PRELIM REVIEW)	KME	APPROVED	21.05.13

SNELL
ENGINEERING CONSULTANTS
1517 State Street, Suite 202, Sarasota, FL 34236
P: 941.954.0661 F: 330.315.2777
snellengineering.com
SUPPORTING ARCHITECTURE

ECE
Erickson Consulting Engineers
7201 Delainey Court
Sarasota, FL 32420
www.ericksonconsultingengineers.com

Copyright Reserved
The Contractor shall verify and be responsible for all dimensions.
DO NOT scale the drawing - any errors or omissions shall be reported
to Erickson Consulting Engineers (ECE) without delay.
The Copyrights to all designs and drawings are the property of ECE.
Reproduction or use for any purpose other than that authorized by ECE is forbidden.

Client/Project
CITY OF NAPLES
735 8th St S
NAPLES, FL.
Naples Beach Restoration
& Water Quality
Improvement Project

File Name:
16-329_Naples Outfalls_60-90% Drawings_SW-Details.dwg

JAW	SMT	KME	21.06.01
Dwn.	Chkd.	Dsgn.	YY.MM.DD

Title
STORMWATER CONSOLIDATION
VAULT 1 DETAILS

Project No.	Scale	
16-329	AS NOTED	
Drawing No.	Sheet	Revision
SC	32	0

Apr 15, 2022 - 2:35pm
C:\Users\bkrach\AppData\Local\Temp\AcPublish_14196\16-329_Naples Outfalls_60-90% Drawings_SW-Details.dwg

VAULT 2 (2ND AVE N)
FDOT J–BOX 4.0' X 8.0'
(INDEX 425–010)

PLAN VIEW

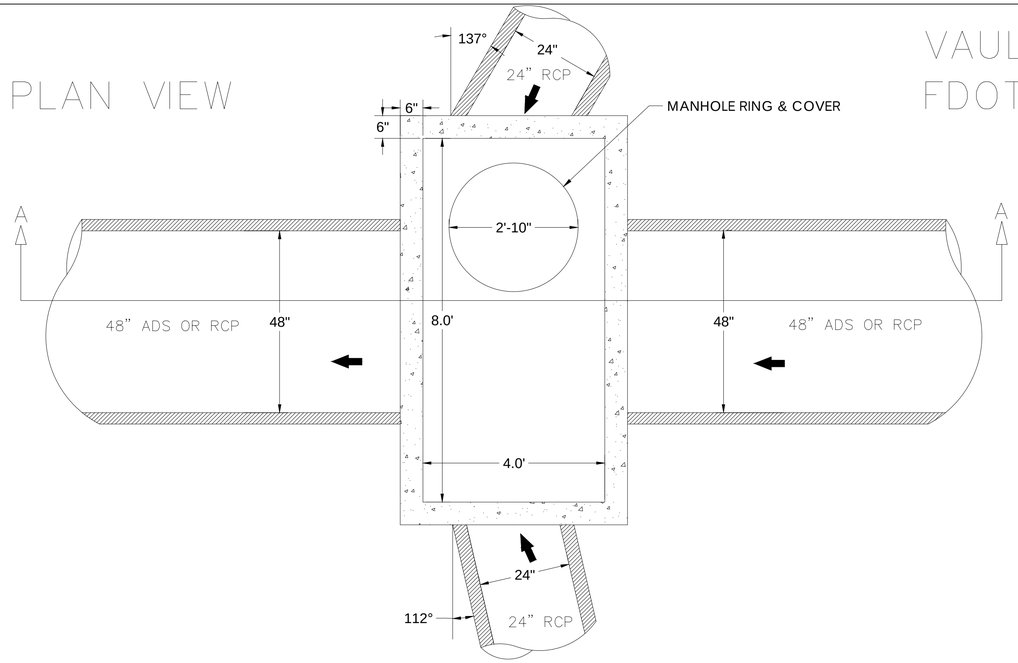

SECTION A–A

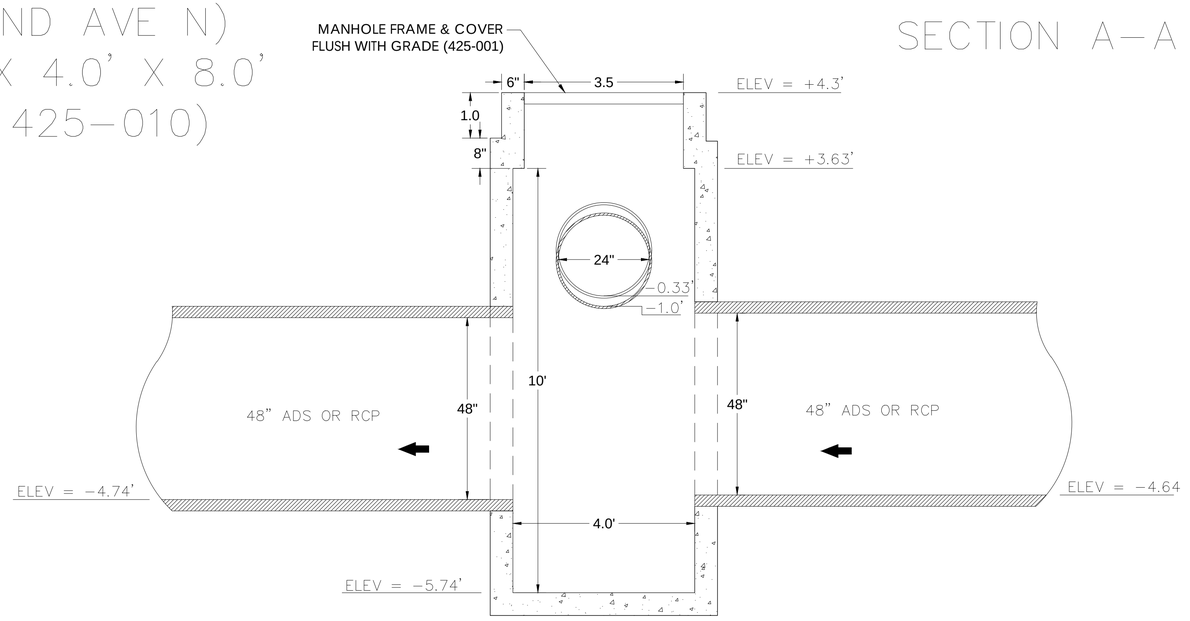

VAULT 3 (1ST AVE N)
FDOT J–BOX 4.0' X 8.0'
(INDEX 425–010)

PLAN VIEW

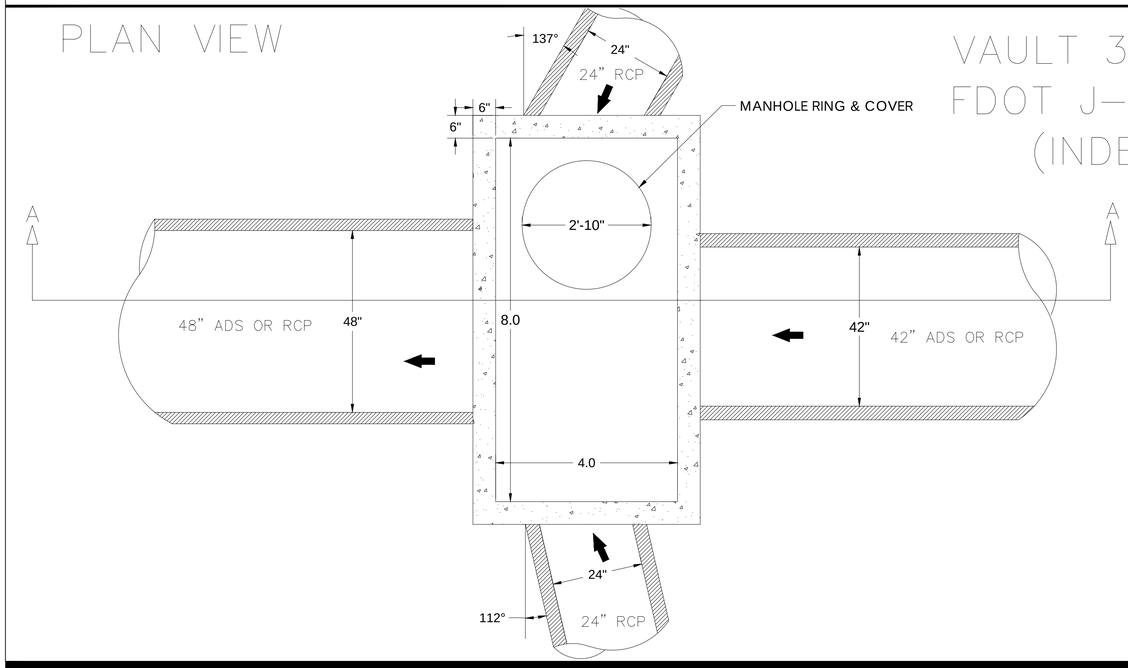

SECTION A–A

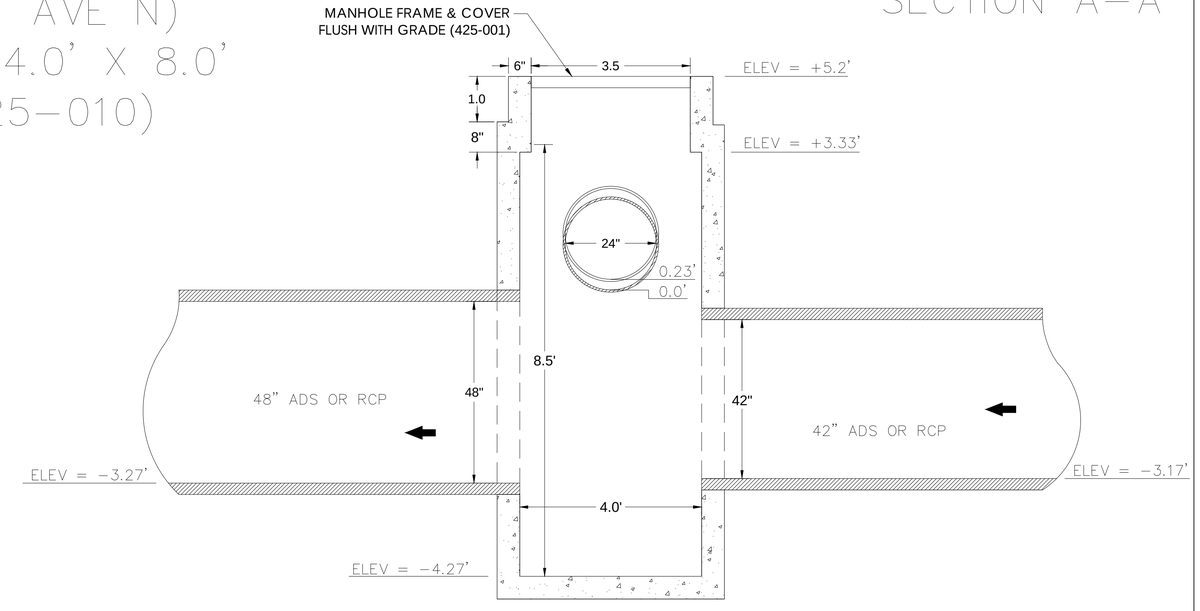

Revision	By	Appd.	YY.MM.DD

Issued	By	Appd.	YY.MM.DD
ISSUED 90% DESIGN DRAWINGS TO CITY (PRELIM REVIEW)	KME	APPROVED	22.04.15
ISSUED 75% DESIGN DRAWINGS TO CITY (PRELIM REVIEW)	KME	APPROVED	21.05.13

ECE
Erickson Consulting Engineers
7201 Delainey Court
Sarasota, FL 32420
www.ericksonconsultingengineers.com

Copyright Reserved
The Contractor shall verify and be responsible for all dimensions.
DO NOT scale the drawing - any errors or omissions shall be reported to Erickson Consulting Engineers (ECE) without delay.
The Copyrights to all designs and drawings are the property of ECE.
Reproduction or use for any purpose other than that authorized by ECE is forbidden.

Client/Project
CITY OF NAPLES
735 8th St S
NAPLES, FL.
Naples Beach Restoration & Water Quality Improvement Project

File Name: 16-329_Naples Outfalls_60-90% Drawings_SW-Details.dwg

JAW	SMT	KME	21.06.01
Dwn.	Chkd.	Dsgn.	YY.MM.DD

Title
STORMWATER CONSOLIDATION
VAULT DETAILS
VAULT 2 & VAULT 3

Project No.	Scale	
16-329	AS NOTED	
Drawing No.	Sheet	Revision
SC	33	0

C:\Users\bkrach\AppData\Local\Temp\AcPublish_14196\16-329_Naples Outfalls_60-90% Drawings_SW-Details.dwg Apr 15, 2022 - 2:35pm

VAULT 4
(ALLEY N OF CENTRAL AVE)
FDOT J-BOX 4.0' X 8.0'
(INDEX 425-010)

PLAN VIEW

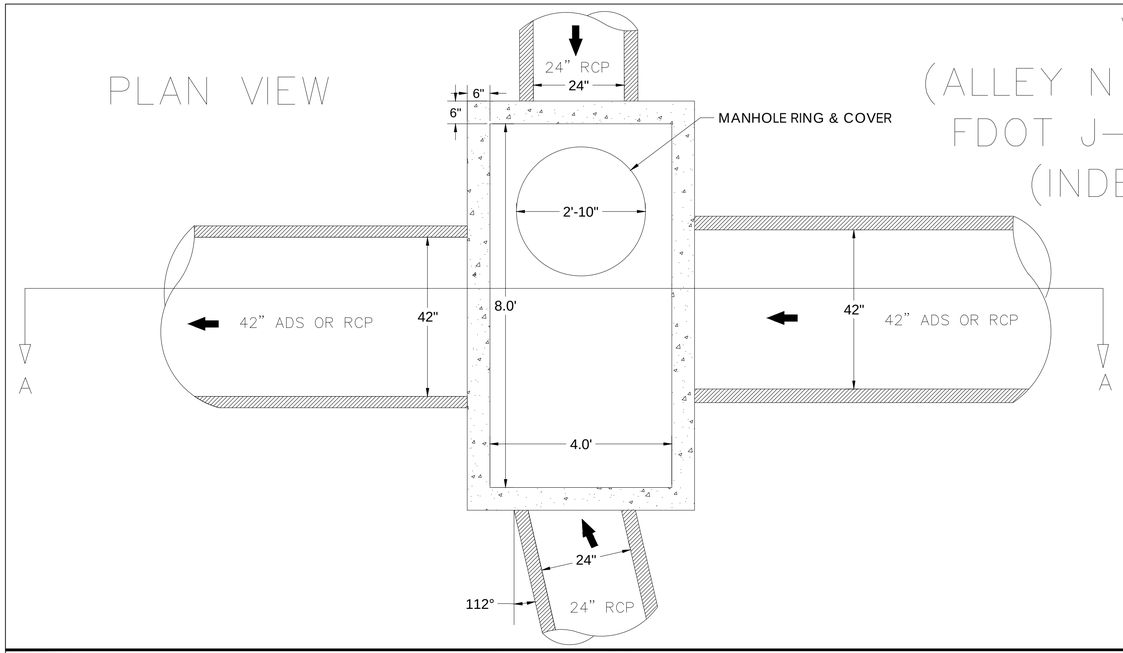

SECTION A-A

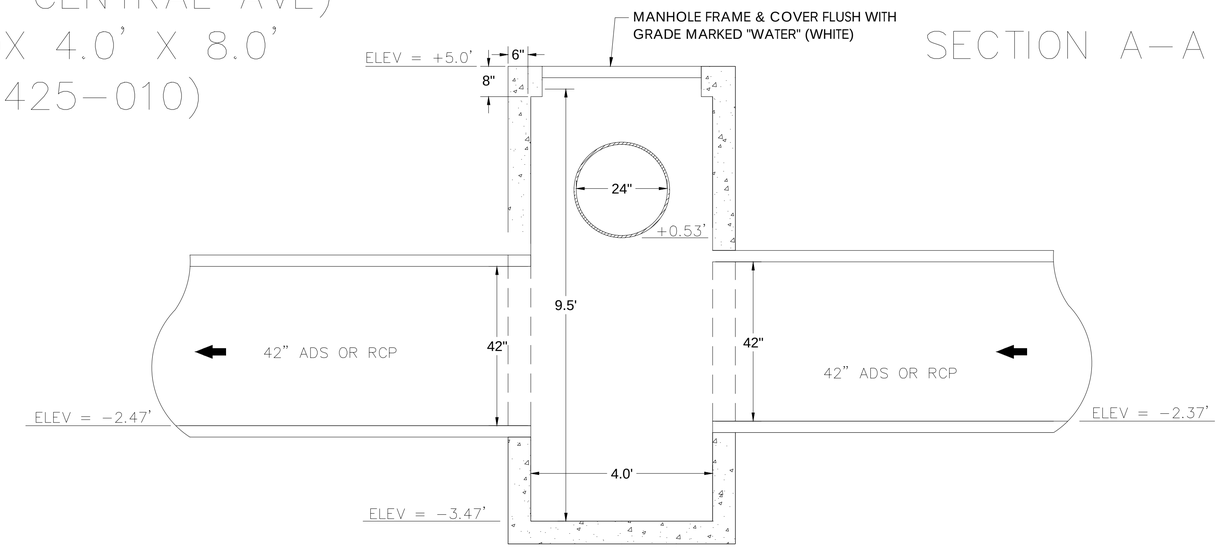

VAULT 5 (CENTRAL AVE)
FDOT J-BOX 4.0' X 8.0'
(INDEX 425-010)

PLAN VIEW

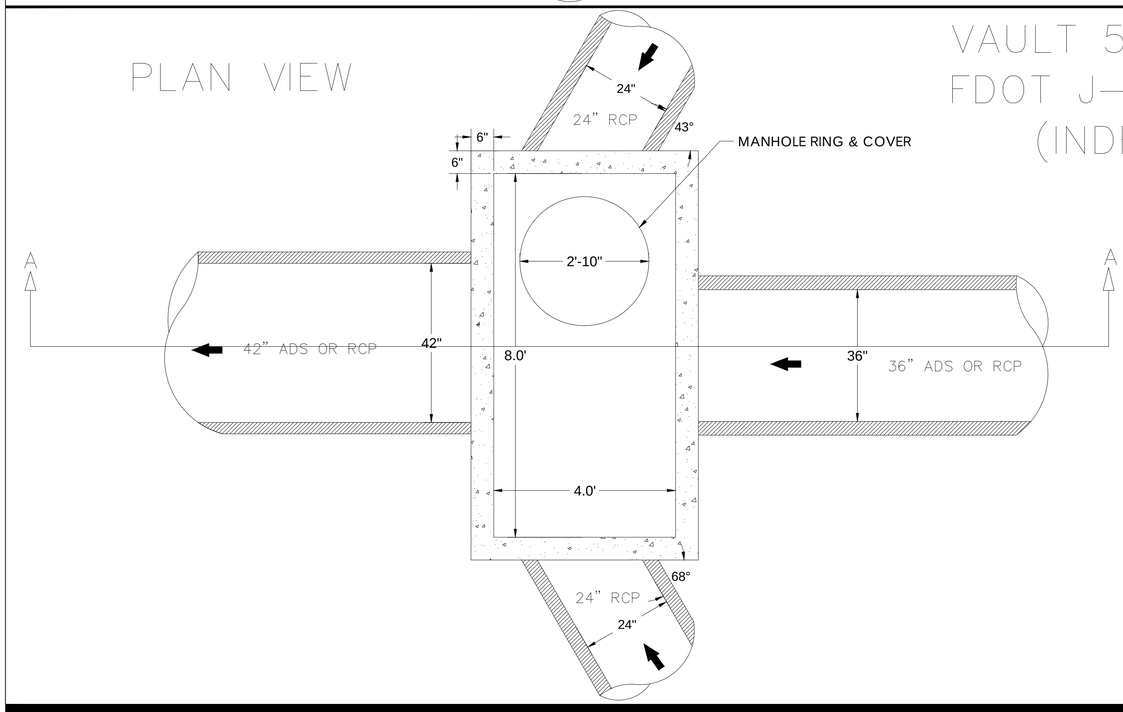

SECTION A-A

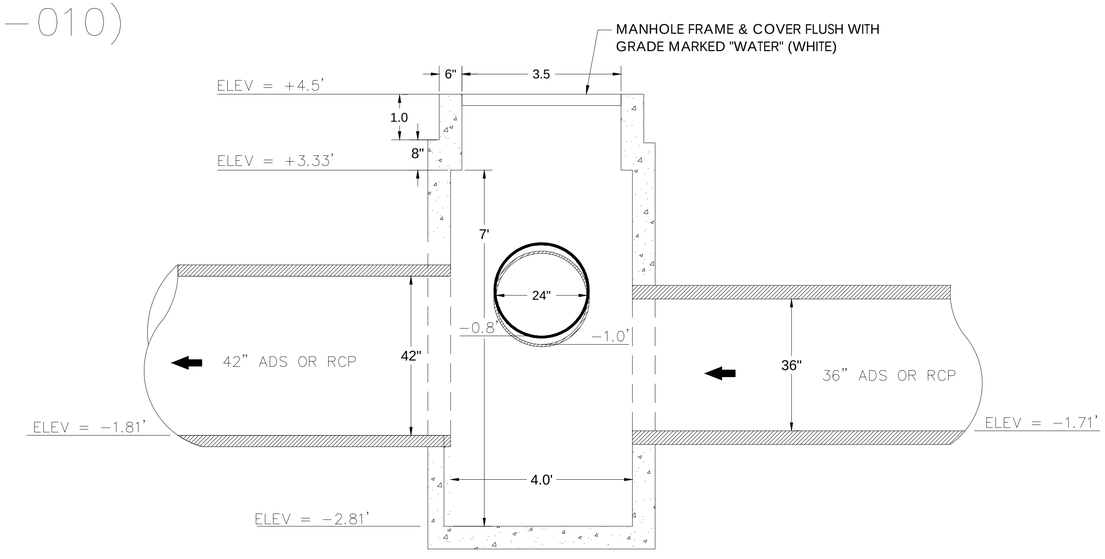

Revision	By	Appd.	YY.MM.DD

Issued	By	Appd.	YY.MM.DD
ISSUED 90% DESIGN DRAWINGS TO CITY (PRELIM REVIEW)	KME	APPROVED	22.04.15
ISSUED 75% DESIGN DRAWINGS TO CITY (PRELIM REVIEW)	KME	APPROVED	21.05.13

ECE
Erickson Consulting Engineers
7201 Delainey Court
Sarasota, FL 32420
www.ericksonconsultingengineers.com

Copyright Reserved
The Contractor shall verify and be responsible for all dimensions.
DO NOT scale the drawing - any errors or omissions shall be reported
to Erickson Consulting Engineers (ECE) without delay.
The Copyrights to all designs and drawings are the property of ECE.
Reproduction or use for any purpose other than that authorized by ECE is forbidden.

Client/Project
CITY OF NAPLES
735 8th St S
NAPLES, FL.
Naples Beach Restoration
& Water Quality
Improvement Project

File Name:
16-329_Naples Outfalls_60-90% Drawings_SW-Details.dwg

Dwn.	Chkd.	Dsgn.	YY.MM.DD
JAW	SMT	KME	21.06.01

Title
STORMWATER CONSOLIDATON
VAULT DETAILS
VAULT 4 & VAULT 5

Project No.	Scale	
16-329	AS NOTED	
Drawing No.	Sheet	Revision
SC	34	0

C:\Users\bkrach\AppData\Local\Temp\AcPublish_14196\16-329_Naples Outfalls_60-90% Drawings_SW-Details.dwg Apr 15, 2022-2:35pm

VAULT 6
(ALLEY, ADJ. TO 1ST AVE S)
FDOT J–BOX 5.0' X 5.0'
(INDEX 425–010)

PLAN VIEW

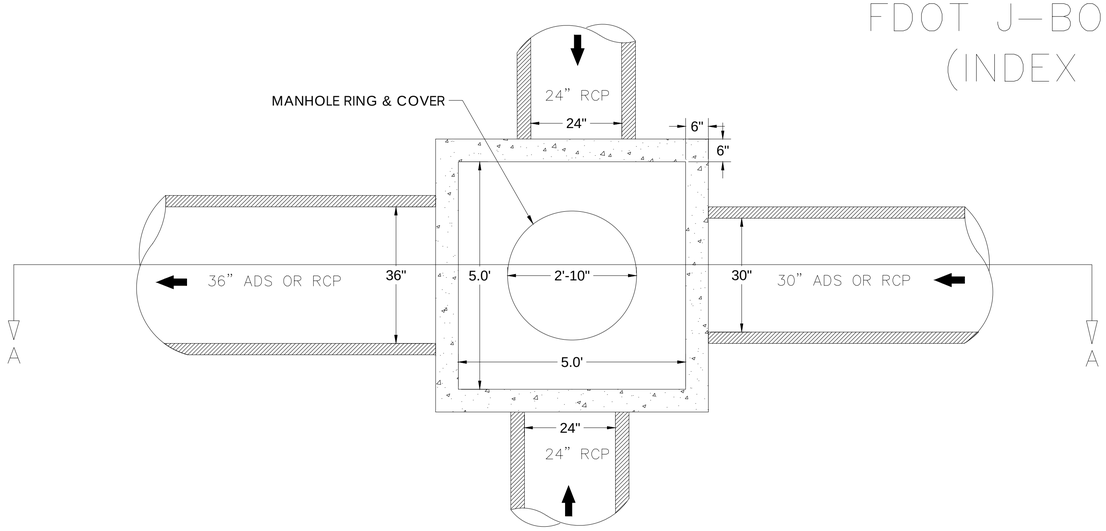

SECTION A–A

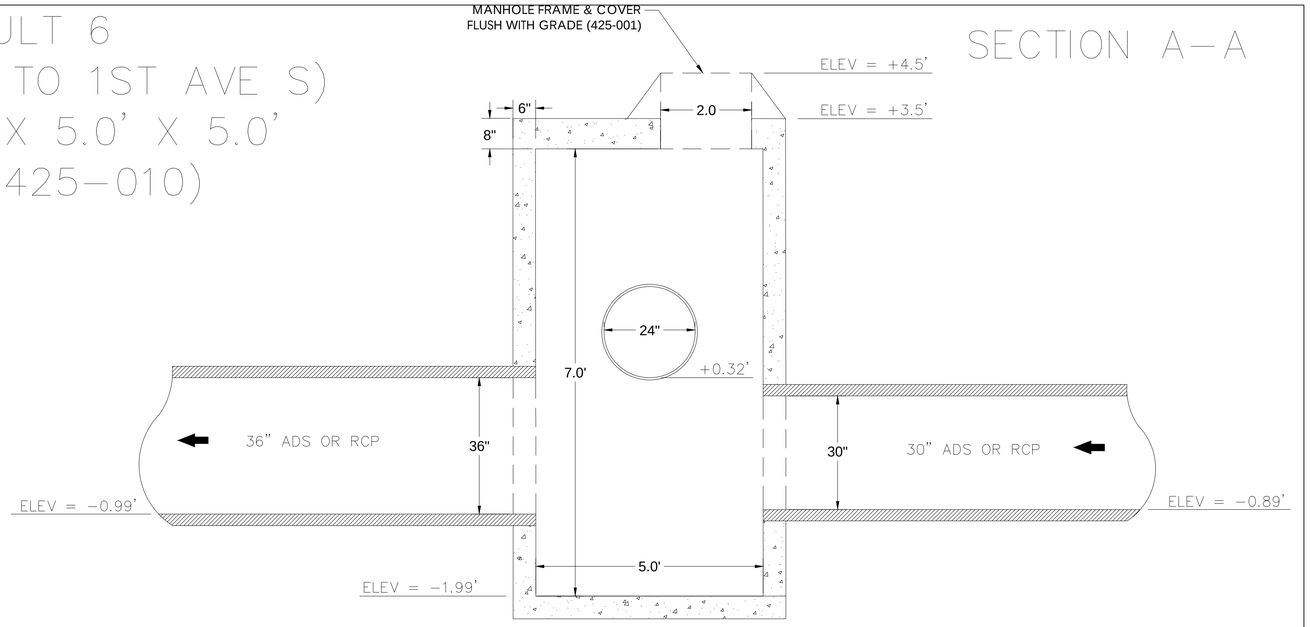

VAULT 7
(ALLEY)
FDOT J–BOX 5.0' X 5.0'
(INDEX 425–010)

PLAN VIEW

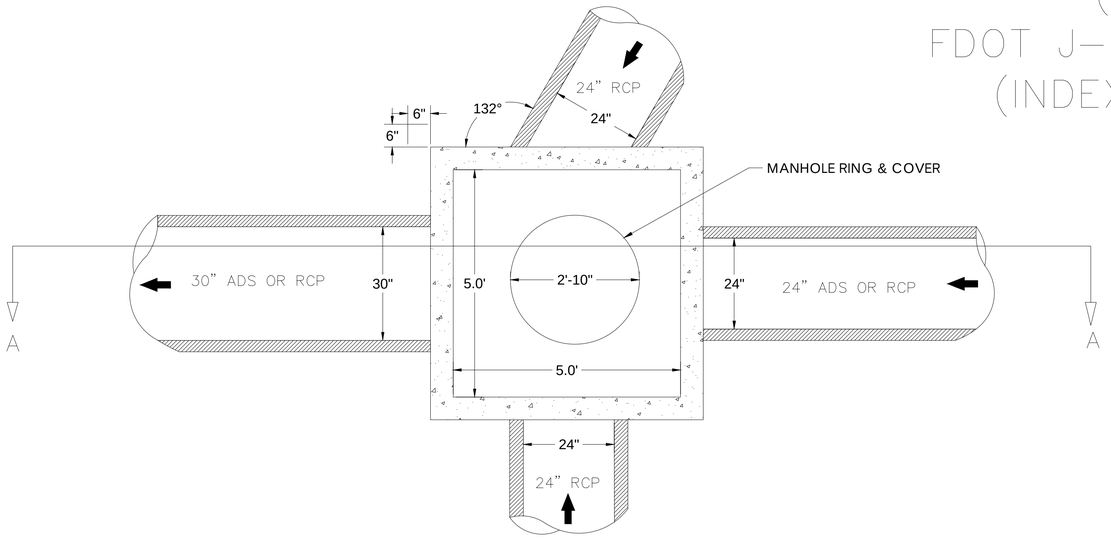

SECTION A–A

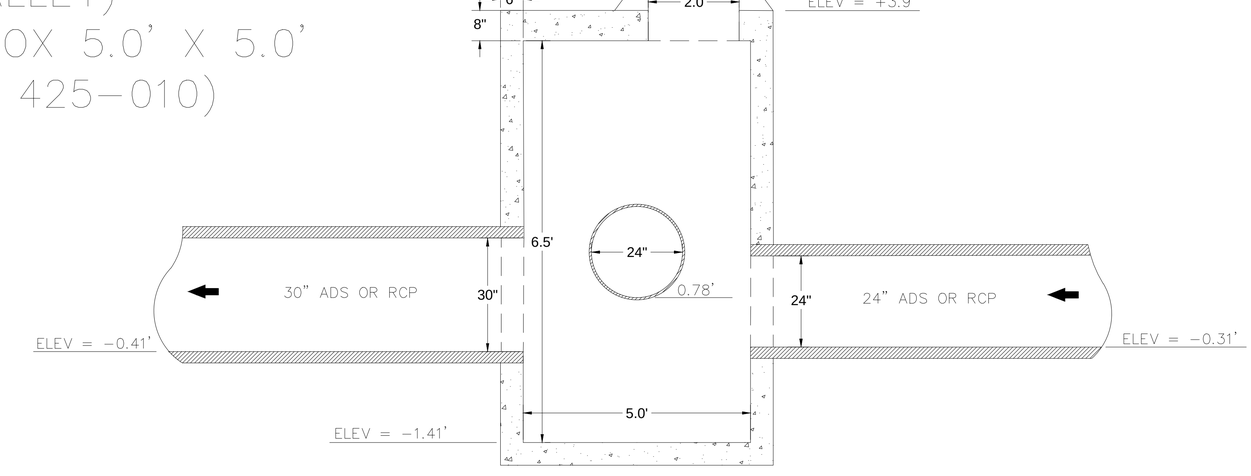

Revision	By	Appd.	YY.MM.DD

Issued	By	Appd.	YY.MM.DD
ISSUED 90% DESIGN DRAWINGS TO CITY (PRELIM REVIEW)	KME	APPROVED	22.04.15
ISSUED 75% DESIGN DRAWINGS TO CITY (PRELIM REVIEW)	KME	APPROVED	21.05.13

Erickson Consulting Engineers

7201 Delainey Court
Sarasota, FL 32420
www.ericksonconsultingengineers.com

Copyright Reserved

The Contractor shall verify and be responsible for all dimensions. DO NOT scale the drawing - any errors or omissions shall be reported to Erickson Consulting Engineers (ECE) without delay. The Copyrights to all designs and drawings are the property of ECE. Reproduction or use for any purpose other than that authorized by ECE is forbidden.

Client/Project

CITY OF NAPLES
735 8th St S
NAPLES, FL.

Naples Beach Restoration & Water Quality Improvement Project

File Name: 16-329_Naples Outfalls_60-90% Drawings_SW-Details.dwg

JAW	SMT	KME	21.06.01
Dwn.	Chkd.	Dsgn.	YY.MM.DD

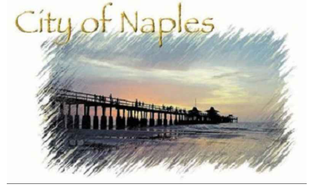

Title

STORMWATER CONSOLIDATION
VAULT DETAILS
VAULT 6 & VAULT 7

Project No.	Scale	
16-329	AS NOTED	
Drawing No.	Sheet	Revision
SC	35	0

C:\Users\bkrach\AppData\Local\Temp\AcPublish_14196\16-329_Naples Outfalls_60-90% Drawings_SW-Details.dwg Apr 15, 2022-2:35pm

VAULT 8
(ALLEY ADJ. TO 1ST AVE S)
FDOT J–BOX 4.0' X 4.0'
(INDEX 425–010)

PLAN VIEW

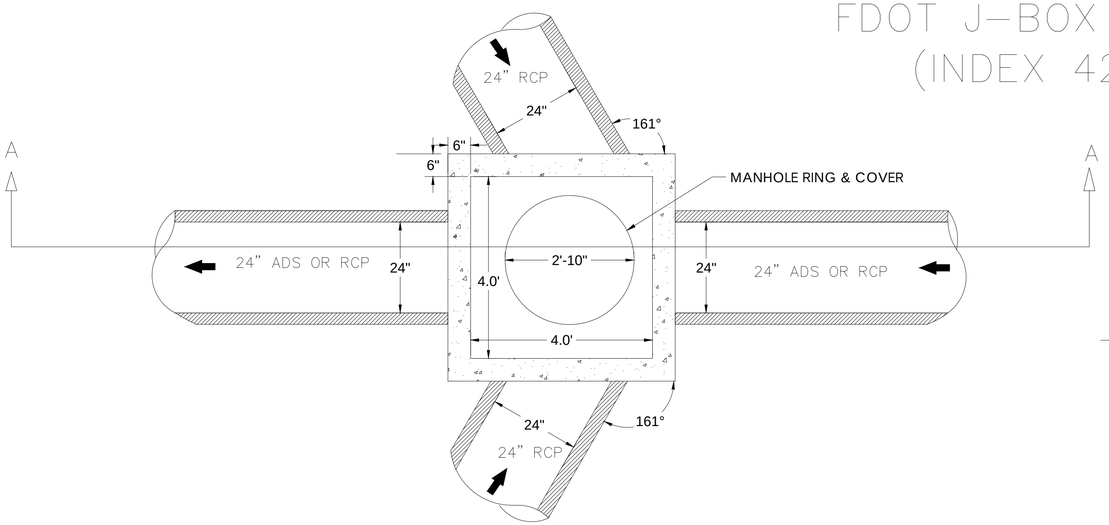

SECTION A–A

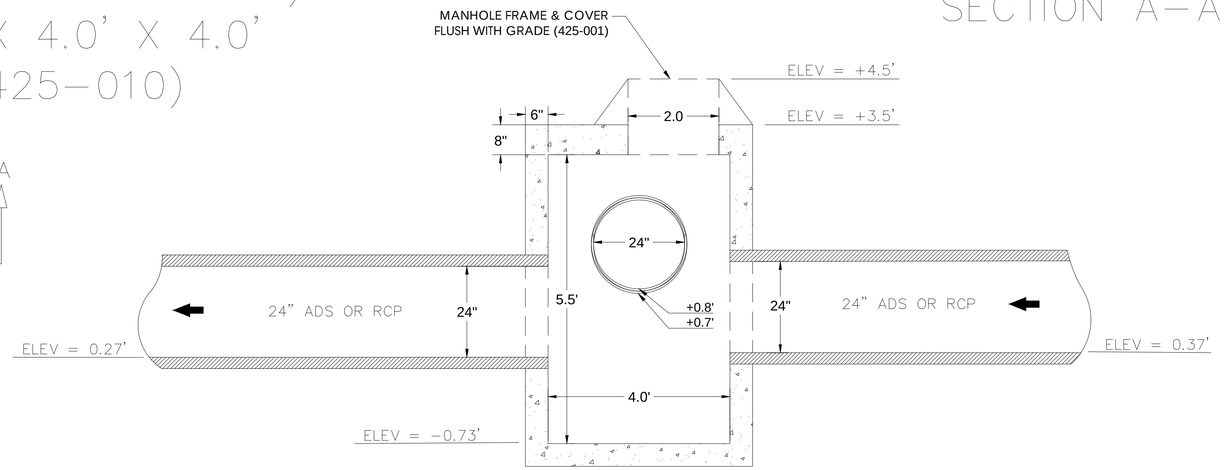

VAULT 9
(2ND AVE S)
FDOT J–BOX 4.0' X 4.0'
(INDEX 425–010)

PLAN VIEW

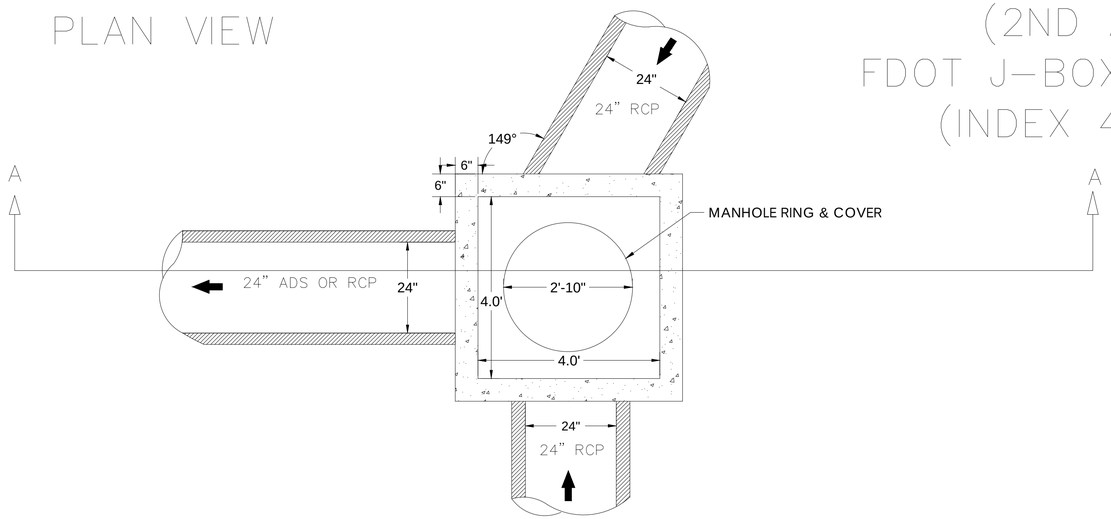

SECTION A–A

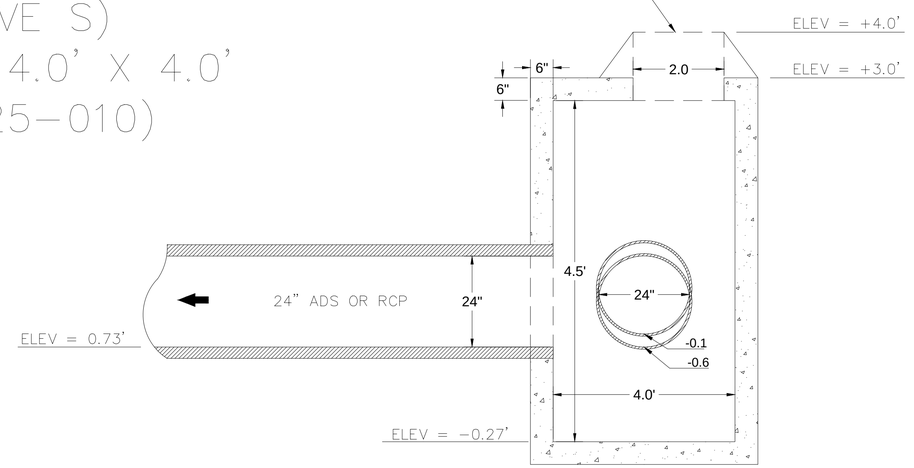

Revision	By	Appd.	YY.MM.DD

Issued	By	Appd.	YY.MM.DD
ISSUED 90% DESIGN DRAWINGS TO CITY (PRELIM REVIEW)	KME	APPROVED	22.04.15
ISSUED 75% DESIGN DRAWINGS TO CITY (PRELIM REVIEW)	KME	APPROVED	21.05.13

ECE
Erickson Consulting Engineers
7201 Delainey Court
Sarasota, FL 32420
www.ericksonconsultingengineers.com

Copyright Reserved
The Contractor shall verify and be responsible for all dimensions. DO NOT scale the drawing - any errors or omissions shall be reported to Erickson Consulting Engineers (ECE) without delay.
The Copyrights to all designs and drawings are the property of ECE. Reproduction or use for any purpose other than that authorized by ECE is forbidden.

Client/Project
CITY OF NAPLES
735 8th St S
NAPLES, FL.
Naples Beach Restoration & Water Quality Improvement Project

File Name: 16-329_Naples Outfalls_60-90% Drawings_SW-Details.dwg

JAW	SMT	KME	21.06.01
Dwn.	Chkd.	Dsgn.	YY.MM.DD

Title
STORMWATER CONSOLIDATION
VAULT DETAILS
VAULT 8 & VAULT 9

Project No.	Scale	
16-329	AS NOTED	
Drawing No.	Sheet	Revision
SC	36	0

C:\Users\bkrach\AppData\Local\Temp\AcPublish_14196\16-329_Naples Outfalls_60-90% Drawings_SW-Details.dwg Apr 15, 2022-2:35pm

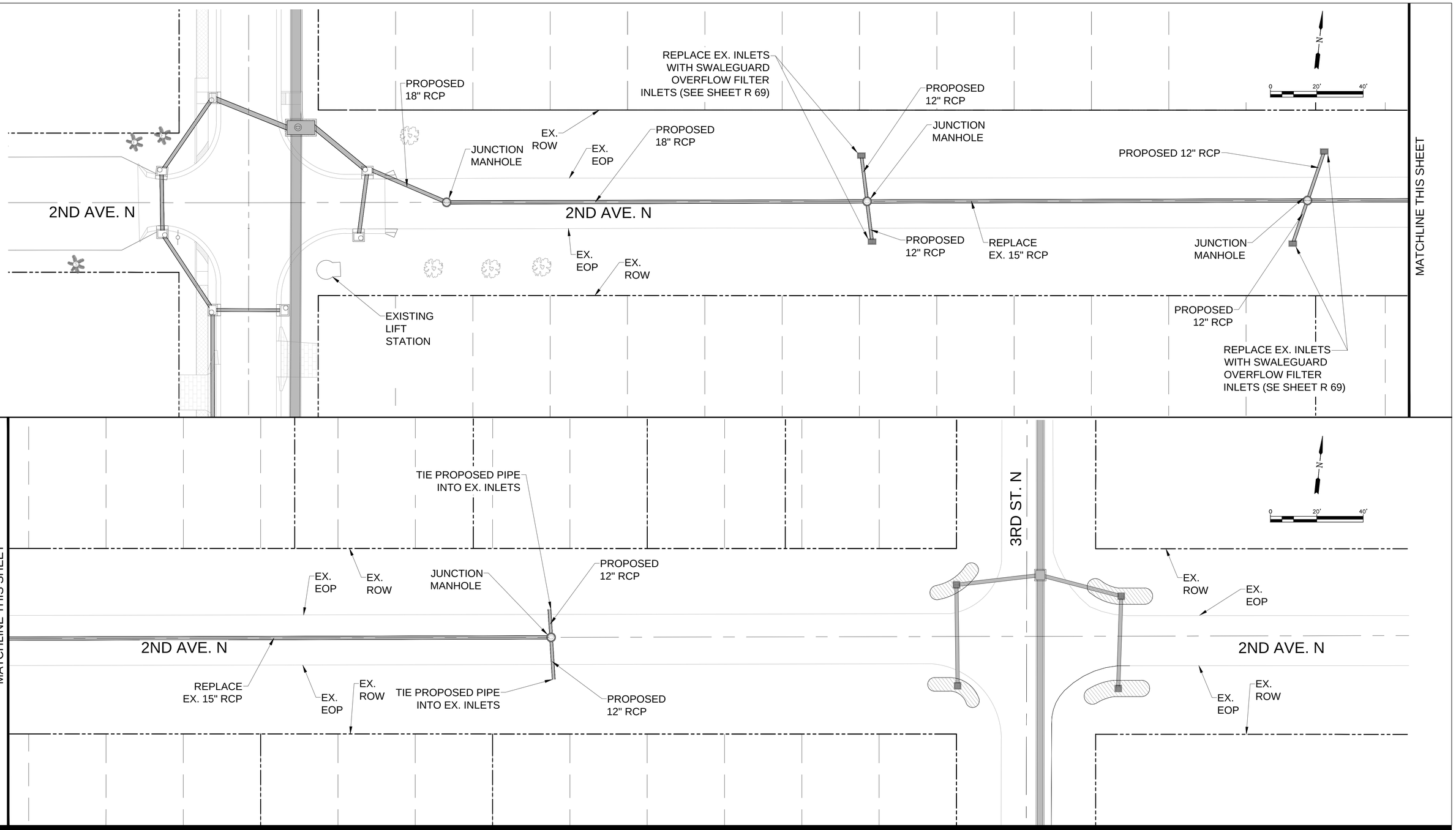

Revision	By	Appd.	YY.MM.DD

Issued	By	Appd.	YY.MM.DD
ISSUED 90% DESIGN DRAWINGS TO CITY (PRELIM REVIEW)	KME	APPROVED	22.04.15
ISSUED 75% DESIGN DRAWINGS TO CITY (PRELIM REVIEW)	KME	APPROVED	21.05.13

ECE
Erickson Consulting Engineers
7201 Delainey Court
Sarasota, FL 32420
www.ericksonconsultingengineers.com

Copyright Reserved
The Contractor shall verify and be responsible for all dimensions. DO NOT scale the drawing - any errors or omissions shall be reported to Erickson Consulting Engineers (ECE) without delay.
The Copyrights to all designs and drawings are the property of ECE. Reproduction or use for any purpose other than that authorized by ECE is forbidden.

Client/Project
CITY OF NAPLES
735 8th St S
NAPLES, FL.
Naples Beach Restoration & Water Quality Improvement Project

File Name: 16-329_Naples Outfalls_90-100% Drawings_SW-Plan.dwg

Dwn.	Chkd.	Dsgn.	YY.MM.DD
JAW	SMT	KME	21.06.01

Title
STORMWATER CONSOLIDATION
2ND AVE N.
STORM LINE REHABILITATION PLAN

Project No.	Scale	
16-329	AS NOTED	
Drawing No.	Sheet	Revision
SC	37	0

Z:\CADD_Graphics\US Projects\16-329_Naples Outfalls_Phase II\Design\90-100%_Plans\16-329_Naples Outfalls_90-100% Drawings_SW-Plan.dwg Apr 15, 2022 - 2:38pm